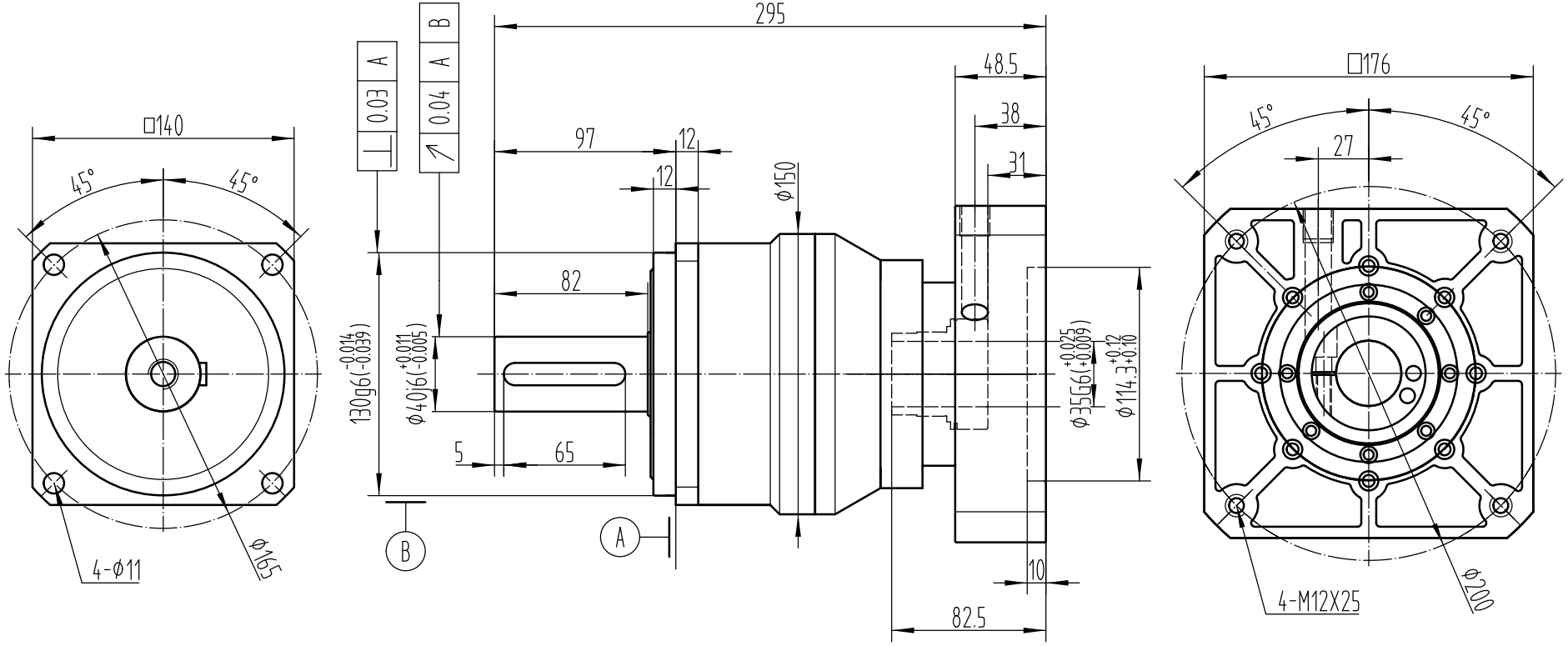
□140
45°
45°
4-φ11
φ165
⊥ 0.03 A
↗ 0.04 A B
295
97
12
12
φ150
82
130g6(-0.014 -0.039)
φ40j6(+0.011 -0.005)
5
65
B
A
48.5
38
31
φ35G6(+0.025 +0.009)
φ114.3+0.12 +0.10
10
82.5
□176
45°
45°
27
4-M12X25
φ200

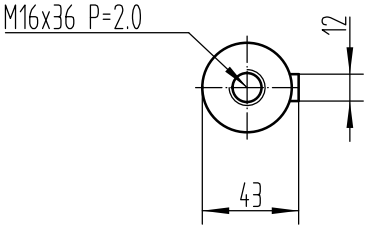
M16x36 P=2.0
12
43