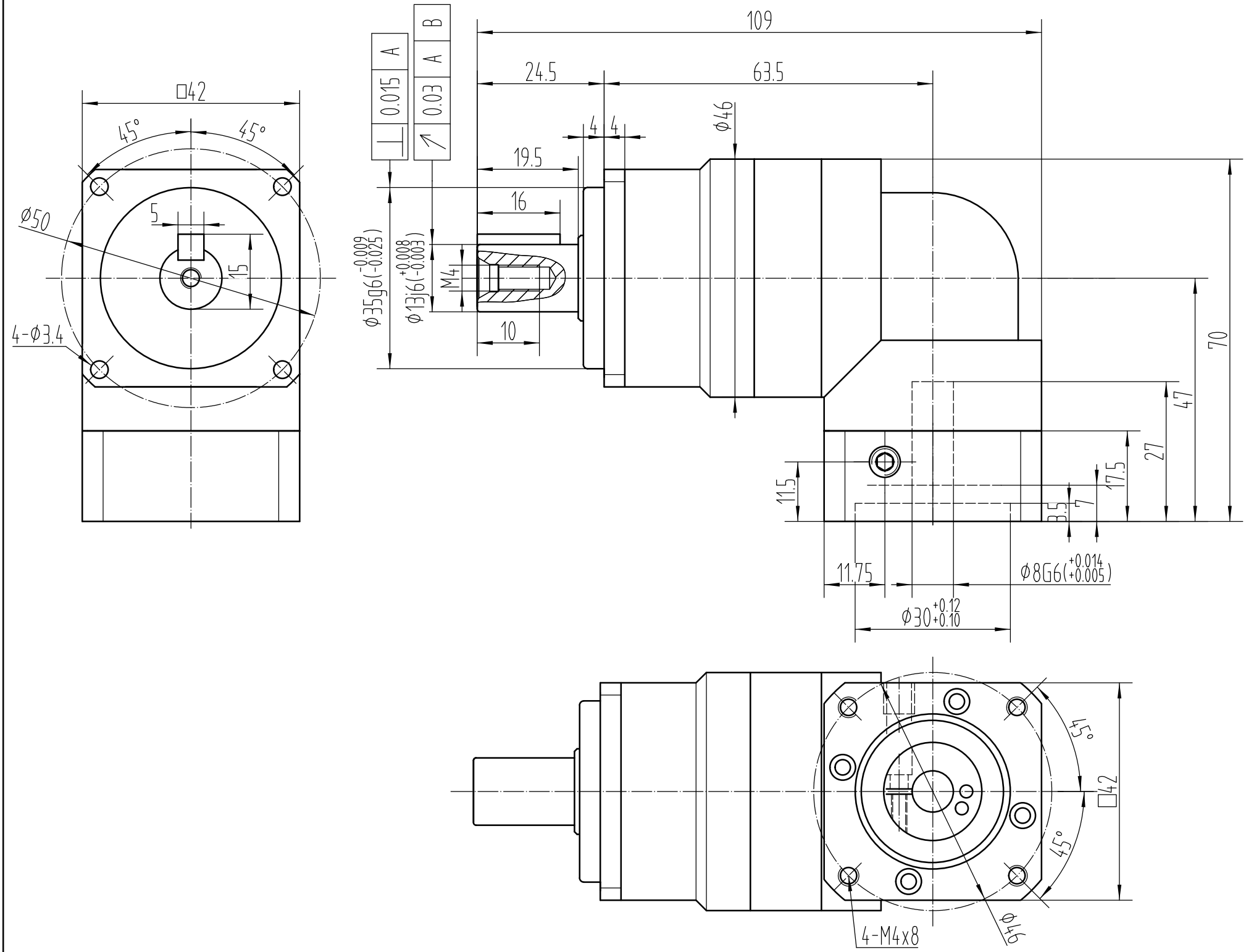
□42
45°
45°
Ø50
5
15
4-Ø3.4
⊥ 0.015 A
↗ 0.03 A B
109
24.5
63.5
4
4
Ø46
19.5
16
Ø35g6(-0.009 -0.025)
Ø13j6(+0.008 -0.003)
M4
10
70
47
27
17.5
11.5
3.5
7
11.75
Ø8G6(+0.014 +0.005)
Ø30 +0.12 +0.10
45°
45°
□42
4-M4x8
Ø46