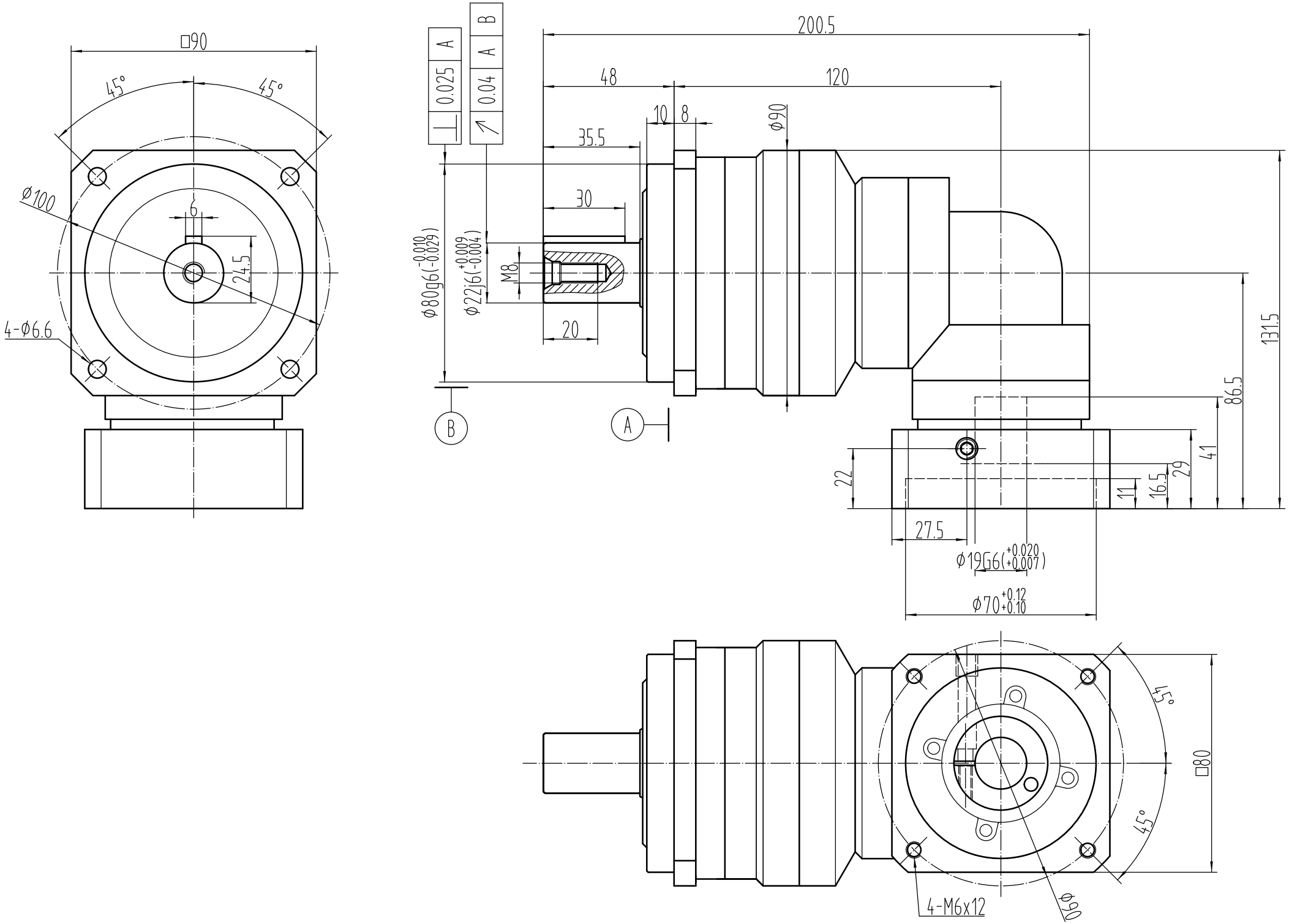
□90
45°
45°
Φ100
6
24.5
4-Φ6.6
0.025 A
0.04 A B
200.5
48
120
10
8
Φ90
35.5
30
Φ80g6(-0.010 -0.029)
Φ22j6(+0.009 -0.004)
M8
20
B
A
131.5
86.5
41
29
16.5
11
22
27.5
Φ19G6(+0.020 +0.007)
Φ70+0.12 +0.10
45°
45°
□80
4-M6x12
Φ90