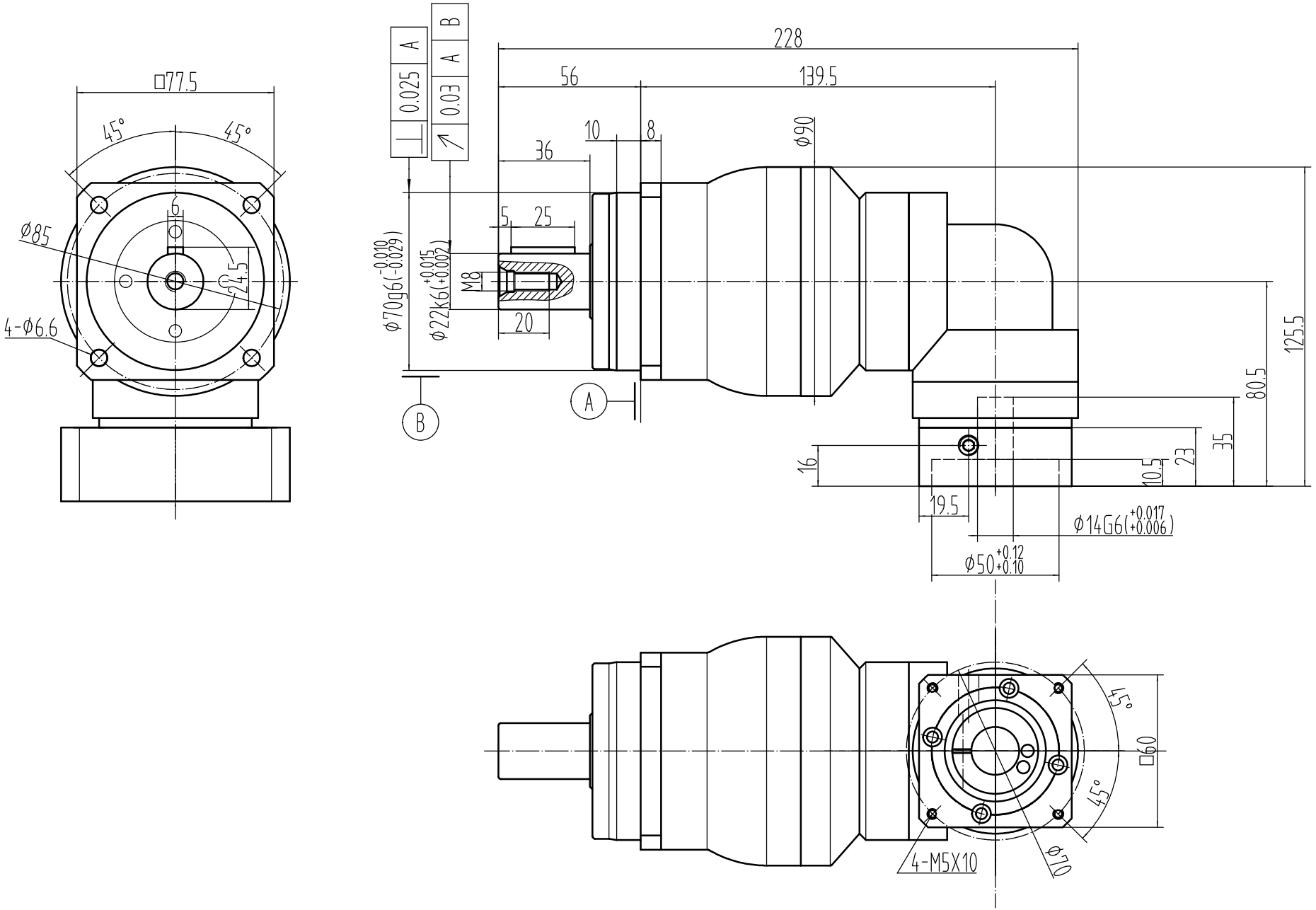
□77.5
45°
45°
6
Ø85
24.5
4-Ø6.6
0.025 A
0.03 A B
228
56
139.5
10
8
36
Ø90
5
25
Ø70g6(-0.010 -0.029)
Ø22k6(+0.015 +0.002)
M8
20
B
A
125.5
80.5
35
23
10.5
16
19.5
Ø14G6(+0.017 +0.006)
Ø50+0.12 +0.10
45°
45°
□60
4-M5X10
Ø70