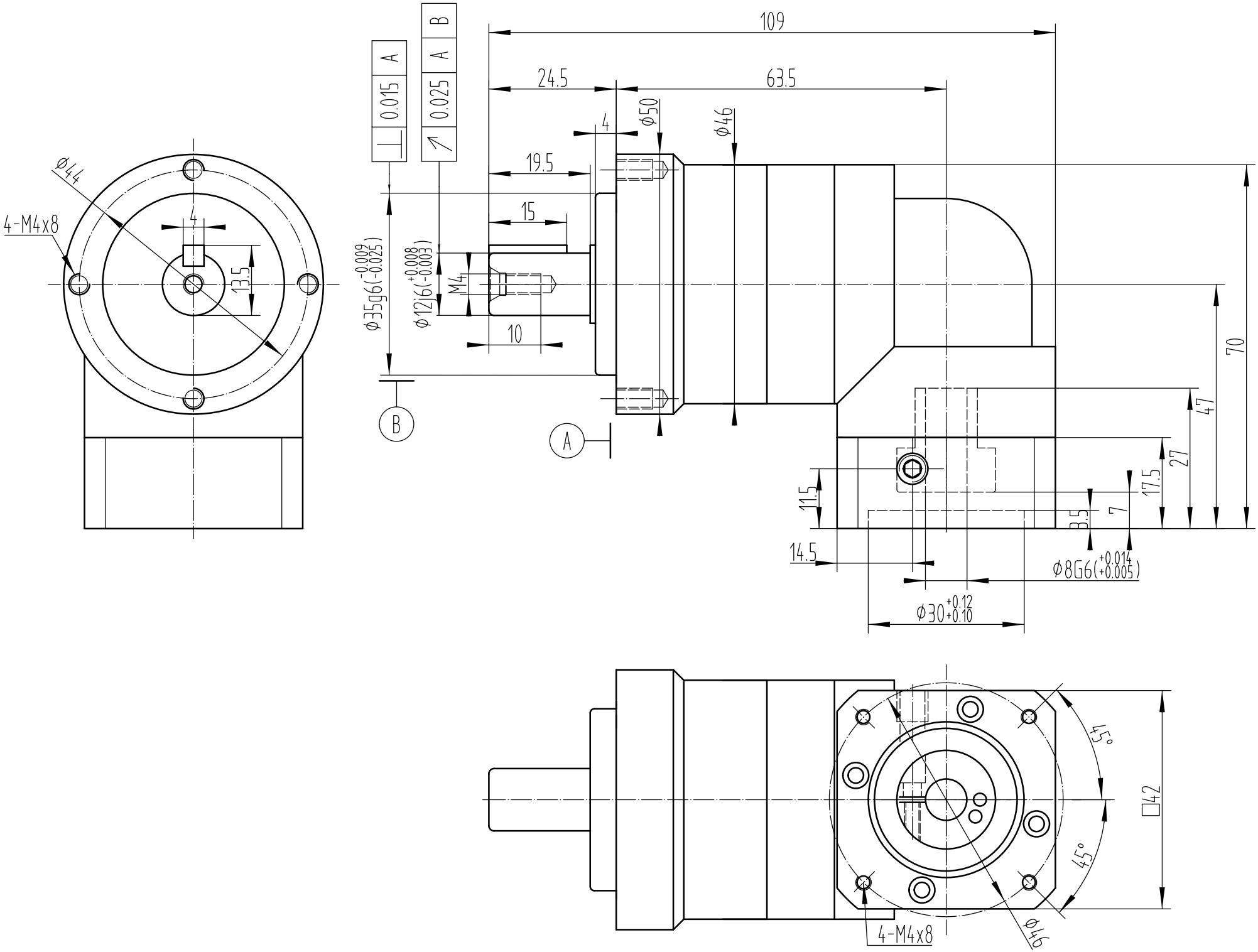
109
24.5
63.5
4
ϕ50
ϕ46
19.5
15
10
M4
ϕ44
4-M4x8
13.5
ϕ35g6(-0.009 -0.025)
ϕ12j6(+0.008 -0.003)
⊥ 0.015 A
↗ 0.025 A B
B
A
70
47
27
17.5
7
3.5
11.5
14.5
ϕ8G6(+0.014 +0.005)
ϕ30+0.12 +0.10
45°
45°
□42
4-M4x8
ϕ46