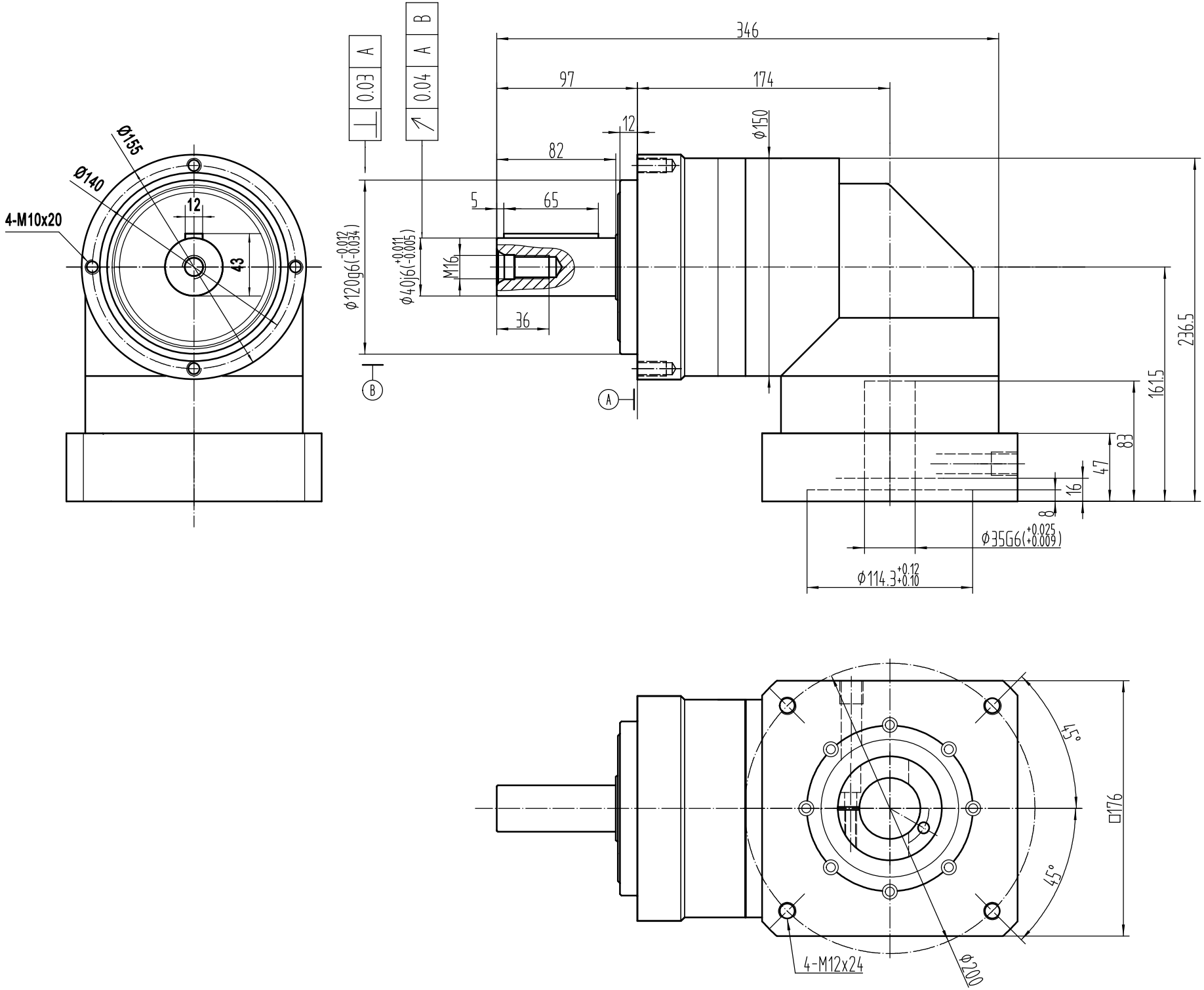
346
97
174
12
82
5
65
M16
36
Ø150
Ø155
Ø140
4-M10x20
12
43
Ø120g6(-0.012 -0.034)
Ø40j6(+0.011 -0.005)
0.03 A
0.04 A B
236.5
161.5
83
47
16
8
Ø35G6(+0.025 +0.009)
Ø114.3+0.12 +0.10
45°
45°
□176
4-M12x24
Ø200