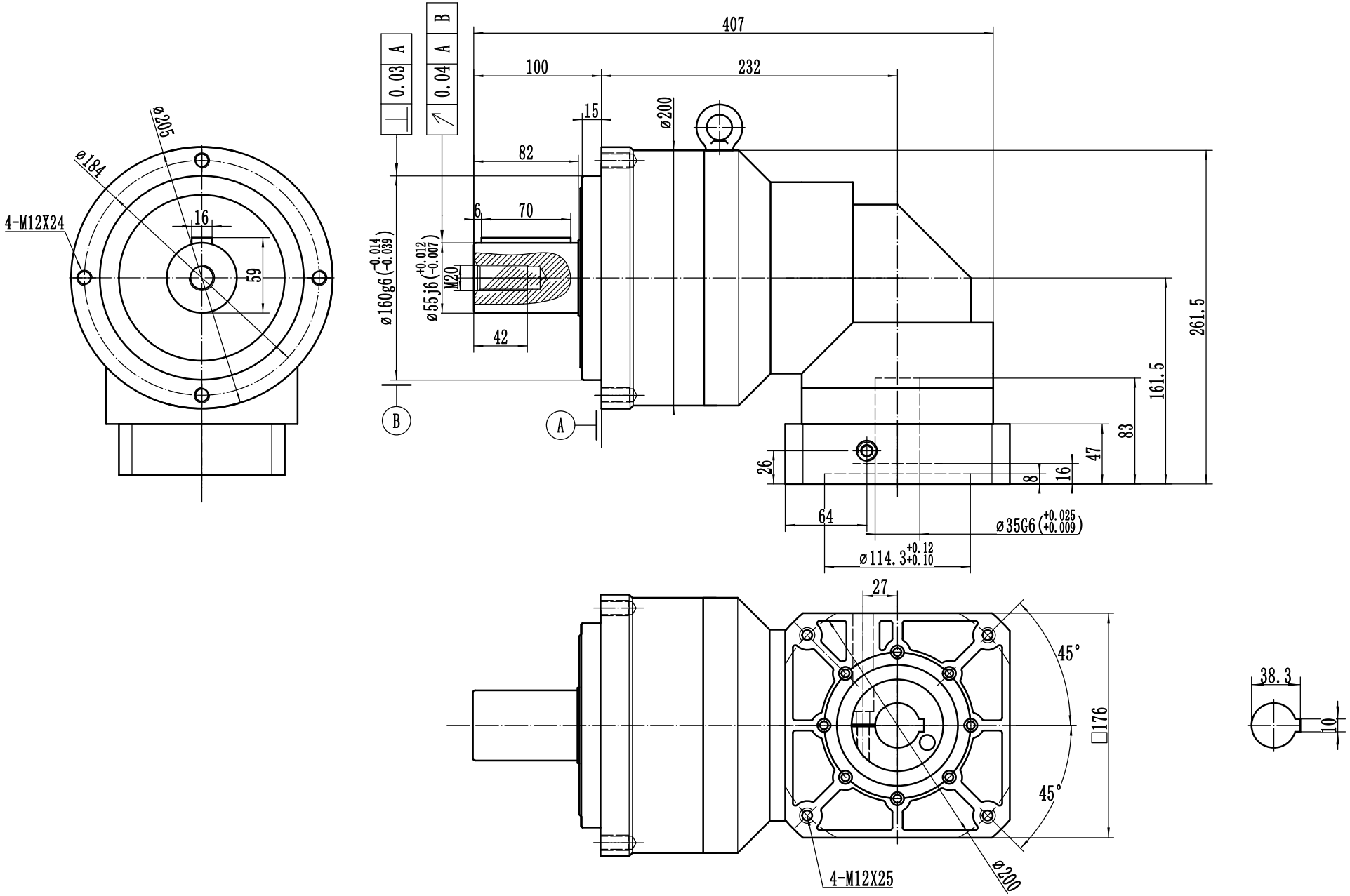
407
100
232
15
82
6
70
42
⌀200
⌀205
⌀184
4-M12X24
16
59
⌀160g6(-0.014 -0.039)
⌀55j6(+0.012 -0.007)
M20
0.03 A
0.04 A B
B
A
261.5
161.5
83
47
16
8
26
64
⌀35G6(+0.025 +0.009)
⌀114.3+0.12 +0.10
27
45°
45°
□176
4-M12X25
⌀200
38.3
10