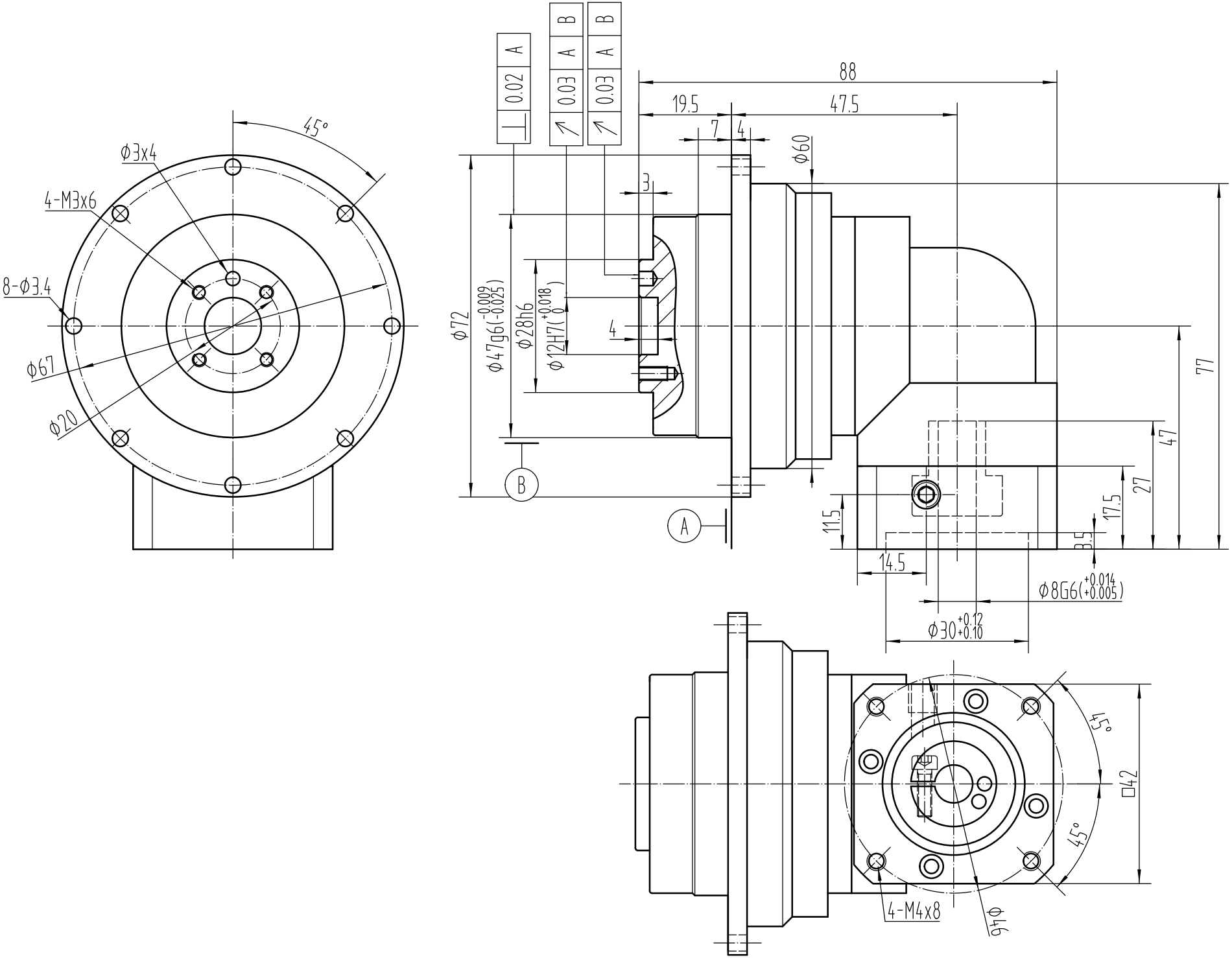
45°
Φ3x4
4-M3x6
8-Φ3.4
Φ67
Φ20
⊥ 0.02 A
↗ 0.03 A B
↗ 0.03 A B
88
19.5
47.5
7
4
Φ60
3
Φ72
Φ47g6(-0.009 -0.025)
Φ28h6
Φ12H7(+0.018 0)
4
B
A
77
47
27
17.5
11.5
3.5
14.5
Φ8G6(+0.014 +0.005)
Φ30+0.12 +0.10
45°
45°
□42
4-M4x8
Φ46