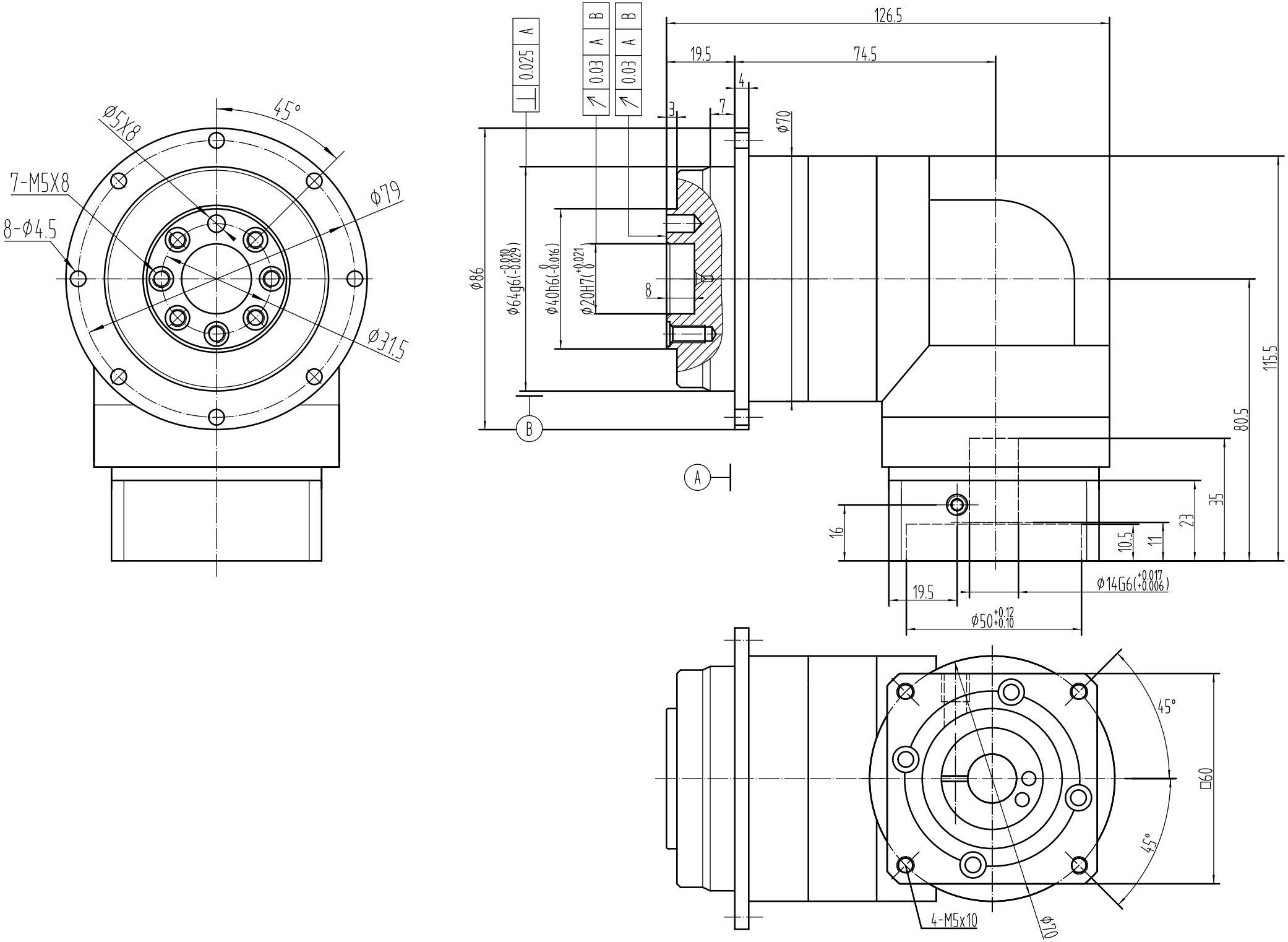
45°
Ø5X8
7-M5X8
8-Ø4.5
Ø79
Ø31.5
126.5
19.5
74.5
4
3
7
Ø70
0.025 A
0.03 A B
0.03 A B
Ø86
Ø64g6(-0.010 -0.029)
Ø40h6(0 -0.016)
Ø20H7(+0.021 0)
8
B
A
115.5
80.5
35
23
16
10.5
11
19.5
Ø14G6(+0.017 +0.006)
Ø50+0.12 +0.10
45°
□60
45°
4-M5x10
Ø70