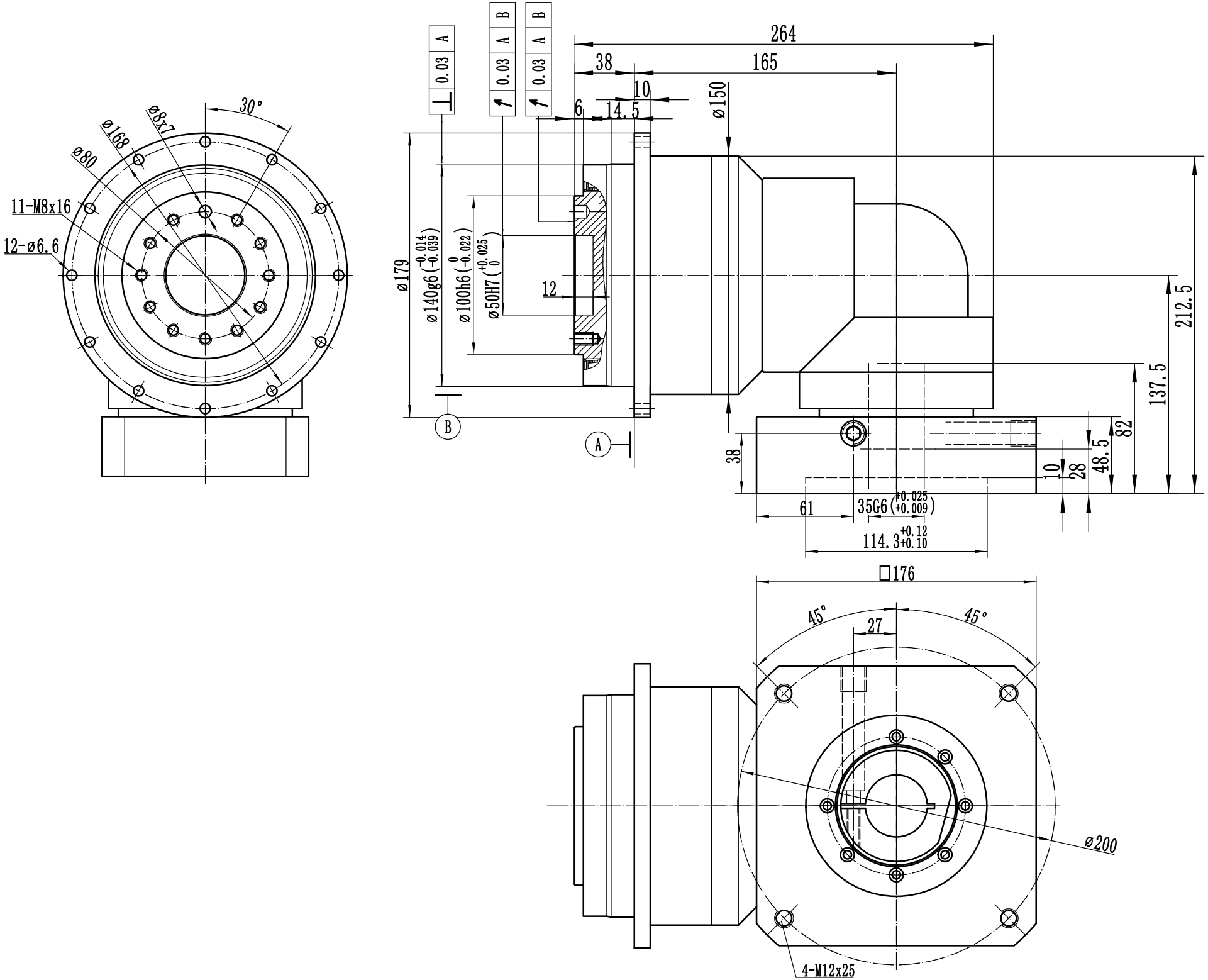
30°
ø8x7
ø168
ø80
11-M8x16
12-ø6.6
⊥ 0.03 A
↗ 0.03 A B
↗ 0.03 A B
264
38
165
10
6
14.5
ø150
ø179
ø140g6 (-0.014 -0.039)
ø100h6 (0 -0.022)
ø50H7 (+0.025 0)
12
212.5
137.5
82
48.5
28
10
38
61
35G6 (+0.025 +0.009)
114.3 +0.12 +0.10
B
A
□176
45°
45°
27
ø200
4-M12x25