About us

MOTOREDUCER planetary gearboxes entered Chinese market in 2010 and since then have successfully supplied thousands of equipment manufacturers for various industrial applications. Today, in order to follow the booming industrial trend, we adhere more than ever to our philosophy "using world's leading technology, creating value for the world". From 2018 on, MOTOREDUCER full range of products is available with even higher performances and offers a larger choice of low backlash planetary gearboxes.

About us

Performance, innovation and creation are the foundation of MOTOREDUCER spirit; we are always referring to these principles as to bring you entire satisfaction. Quality has always been our daily concern since we are aiming to reach perfection. Our quality and environmental policy remains our top priority and are at the center of our management system which integrates a tracking record for each phase of production and service. Using state-of-the-art high performance equipment for production and quality control of each component, we keep on developing extremely precise gear so as to bring you top notch low backlash planetary gearboxes according to your expectations. In the future we will keep on focusing on innovation to provide you with creative solutions.

Research & Development

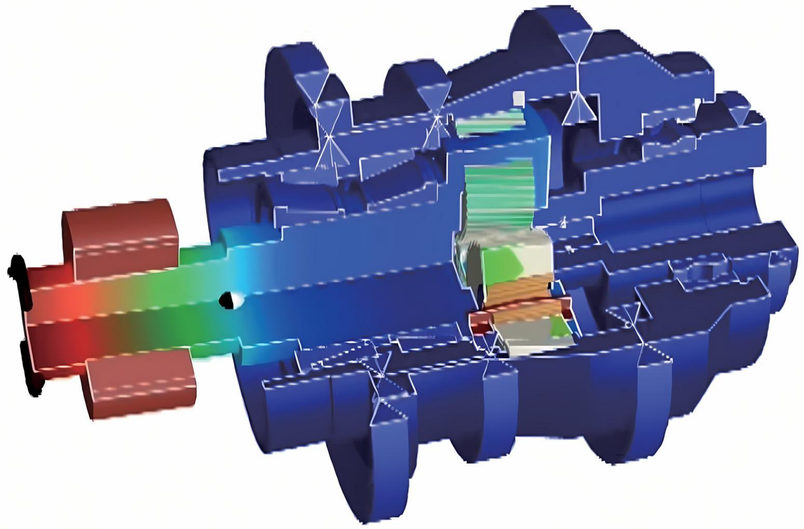

Our research unit is constantly trying to bring new solutions and focus on an optimized use of machine-tools. Our production unit and its100 machines are working under the total control of our quality department, for each manufactured mechanical piece so as to guarantee that there is no defect. This is why we are internally controlling the totality of the processing from machining to handling. Quality is the hardcore of our company spirit, and this enables us to look far in the future. Our internal quality standards often exceeds those usually found in the industry. Because of this strict and challenging control process, we are able to offer you specially long working life planetary gearboxes. Our ISO 9001 certification allows us to get technical feedback from our clients and to continue improving on every aspect.

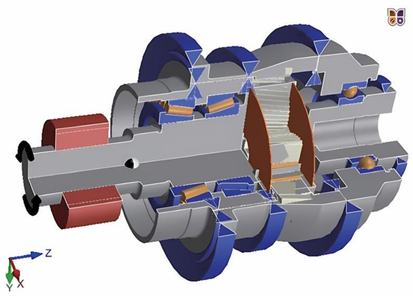

Customer Service

It is an honor for us to share our professional expertise gain through intense cooperation between our partners worldwide. We develop tailor-made concept products upon your special request at a very comprehensive price because we care about your final customers. Following this philosophy we analyze all most important parameters such as working conditions, duration of operation, speeds, or loads in order to bring you the corresponding solution. Our service culture leads us to be where you need us in the shortest delays, whether for supply of parts or technical support for your convenience.

Quality & Production

- From raw material to bearings, gaskets or lubricants, each component comes from the best suppliers of their industry because we chose them through meticulous selection process and we keep on proceeding to stringent quality control to secure your relation with your final clie nt.
- Our helical gears (satellite,ring) are case hardened to 58-62 HRC and machined to class DIN6. This confers them high precision, great stability, high output torque, low noise level and low backlash.
- Our components are processed and corrected internally following our unique technical method.
- Precision is constant all along the working lifetime.

Quality assurance / Power peak

Quality & Production

Quality assurance / Power peak

Quality & Production

1 Film blowing machine

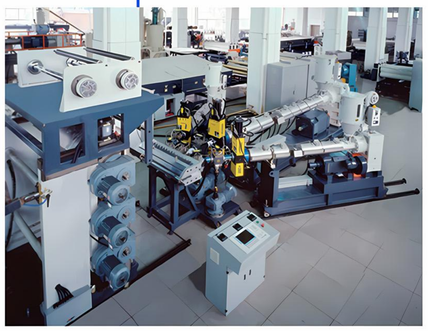

2 Industrial robots

3 Printing machines

Textile machines 4

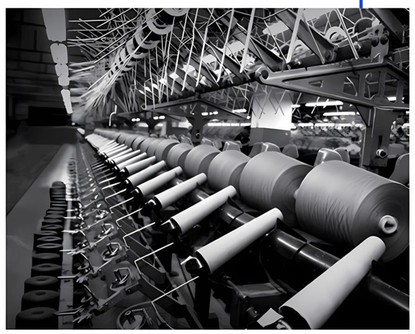

Packing machines 5

Non-standard automation 6

7 Medical Equipment

8 Measuring equipment

9 Automotive industry

Satellite communication 10

Metal processing 11

Pharmaceutical industry 12

We can offer you all the modifications requested in your field of application. Our sales and service network provides quick availability and competent support. For special requirements we bring you individual solutions. Of course, our services are always cost optimized. Thanks to our professional expertise, our specialists provide technical and market consultation for a wide variety of industrial sectors.

Quality assurance / Power peak

3D Section Plan

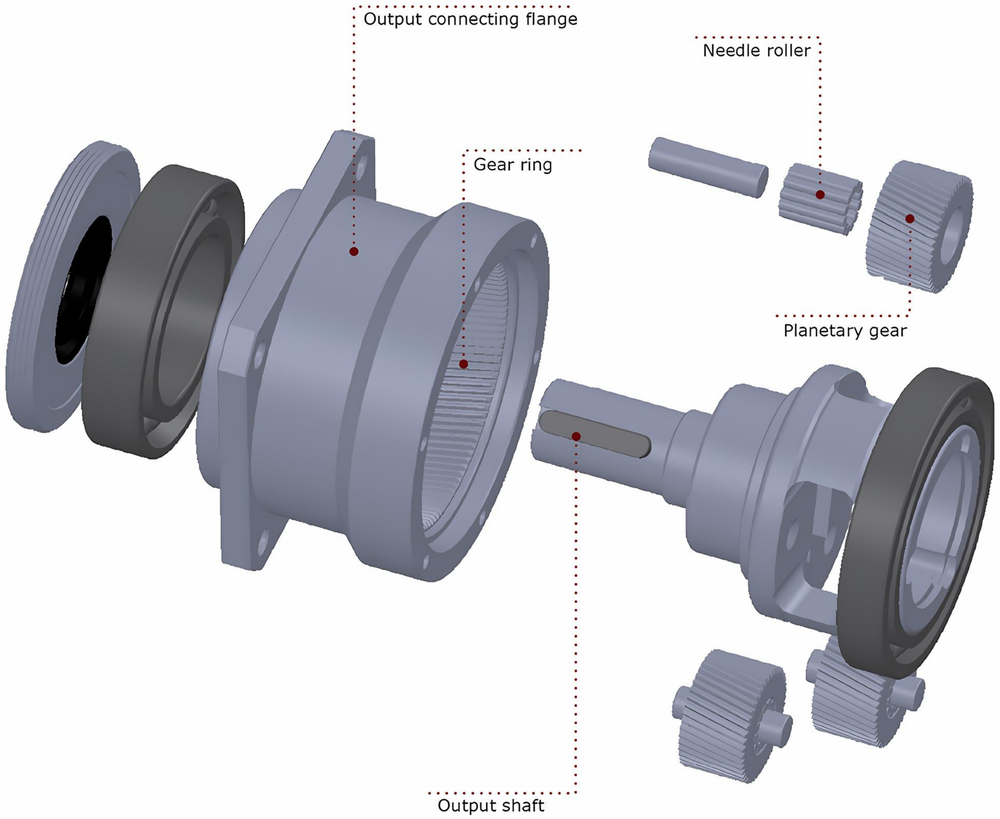

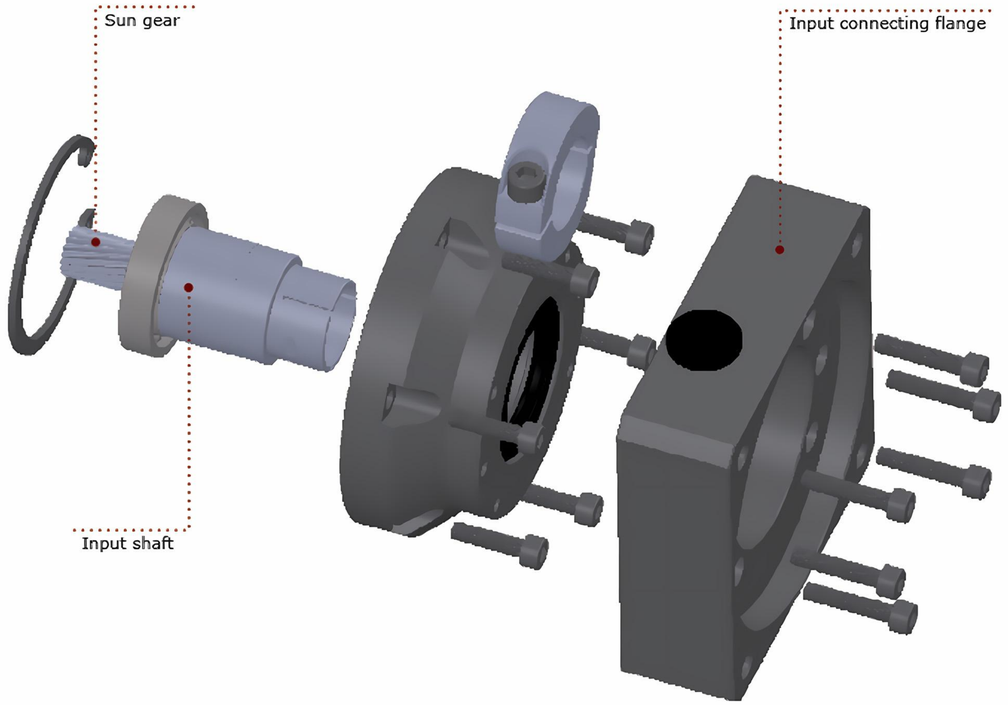

Spare parts are strictly submitted to the quality control process required MOTOREDUCER
All our satellite and sun gears are helical-shaped and are case hardened to 58-62 HRC, granting superior transmission results. Satellite gears are double-supported with full-complement needle bearings that increase torsional stiffness.
According to the International Protection Rating system, MOTOREDUCER gearboxes designation is IP65. This means protection against dust infiltration (dust-tight) and water jets which are emitted from a nozzle and sprayed against the housing from all directions (jet water).

Product line

Performance rating scale

Model		Positioning accuracy	Radial force	Torsional stiffness	Backlash	Wide range of size	Power density	Wide range of ratio
	MKB	M M M	M M	M M M	M M M	M M M	M M M	M M M
	MKE	M M M	M M	M M M	M M M	M M M	M M M	M M M
	MKD	M M M	M M M	M M M	M M M	M M	M M M	M M M
	MKF	M M M	M M M	M M M	M M M	M M	M M M	M M
	MKBR	M M M	M M	M M M	M M	M	M M M	M M M
	MKER	M M M	M M	M M M	M M	M	M M M	M M M
	MKDR	M M M	M M M	M M M	M M	M	M M M	M M M
	MKFR	M M M	M M M	M M M	M M	M	M M M	M M M

M Standard M M Good M M M Maximum

Model selection

Indication for model selection

MKB — 090 — 10 — P — K — F008

Model	Size	Ratio	Precision	Output Shaft	Flange code
MKB	040/060/090/120/140/180/220/240/300	3~100	H:High Precision P:Precision S:Standard	K: Output Shaft With Key S: Smooth Output Shaft	F008 ……
MKE	040/060/090/120/155/205/235/270/330	3~100			
MKD	060/075/100/140/180/210/240	3~100			
MKF	047/064/090/110/140/200/255/258	4~100			
MKBR	040/060/090/120/140/180/220	3~100			
MKER	040/060/090/120/155/205/235	3~100			
MKDR	060/075/100/140/180/210	3~100			
MKFR	047/064/090/110/140/200	4~100			

＊ 1 Stage (3~10), 2 Stages (12~100)
The following two stage transmission ratios are also available
3×4=12、3×7=21、3×9=27、4×4=16、4×6=24、4×7=28 .....

Formula symbols and indices

Designation	Symbol	Unit
Reduction ratio	i	
Nominal output torque	T_{2N}	Nm
Peak acceleration torque	T_{2B}	Nm
Emergency braking torque	T_{2Not}	Nm
Nominal input shaft speed	n_{1N}	rpm
Max. input shaft speed	n_{1Max}	rpm
Backlash	j_t	arcmin
Torsional stiffness	C_{2t}	Nm/arcmin
Max. radial load	F_{2RMax}	N
Max. axial load	F_{2AMax}	N
Rotational Inertia	J_1	$kgcm^2$
Working efficiency	η	%
Working lifetime	L_h	h
Operating temperature	T	℃
Lubrication Method	Lub	
Protection class	PC	
Mounting position	MP	
Noise	dB	

The following table indicates all the symbols and the units that are used in this catalogue.For the gearbox series, all the technical data refer to the present table.

Basic definitions

keyword	Explanation
Arc Minutes	1 degree is equal to 60 arc minutes (1 ° =60 arcmin). When the return clearance is 1 arcmin, the angular deviation transmitted to the output end after the gearbox rotates one circle is 1/60 degree.
Return clearance	It refers to the maximum deviation angle generated when the output shaft and input shaft of the reducer rotate. When measuring, first fix the input shaft of the reducer, and then use a torque meter to load a certain torque at the output end to overcome the friction in the gearbox.
Hysteresis curve	The purpose of testing hysteresis is to obtain the torsional stiffness of the reducer. Through testing, the hysteresis curve can be obtained. During the test, the input end of the reducer is fixed first, and then the two rotation directions of the output end are continuously loaded to T2B (maximum acceleration torque) and then gradually unloaded. The torsion angle corresponding to the torque can be drawn, and a closed curve can be obtained. The return clearance and torsional stiffness of the reducer can be calculated from the hysteresis curve.
Torsional stiffness	Defined by the ratio between the loading torque and the generated torsion angle, $C2t = \Delta T / \Delta\varphi$ On the hysteresis curve, it can be calculated how much torque is needed to rotate the output shaft by one arc minute.
Moment of Inertia	Moment of inertia, in physics, quantitative measure of the rotational inertia of a body—i.e., the opposition that the body exhibits to having its speed of rotation about an axis altered by the application of a torque (turning force).

Return clearance diagram

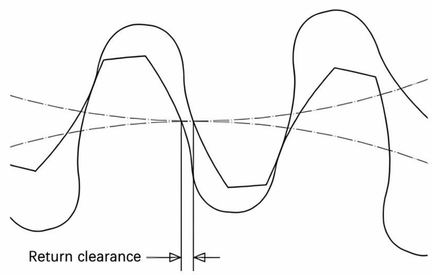

Hysteresis curve diagram

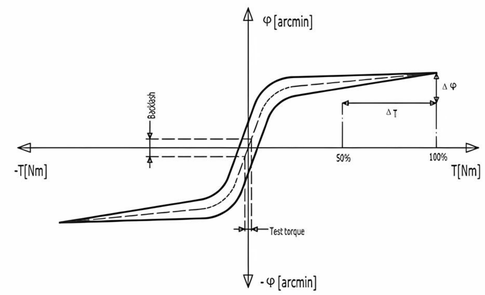

Ordering process

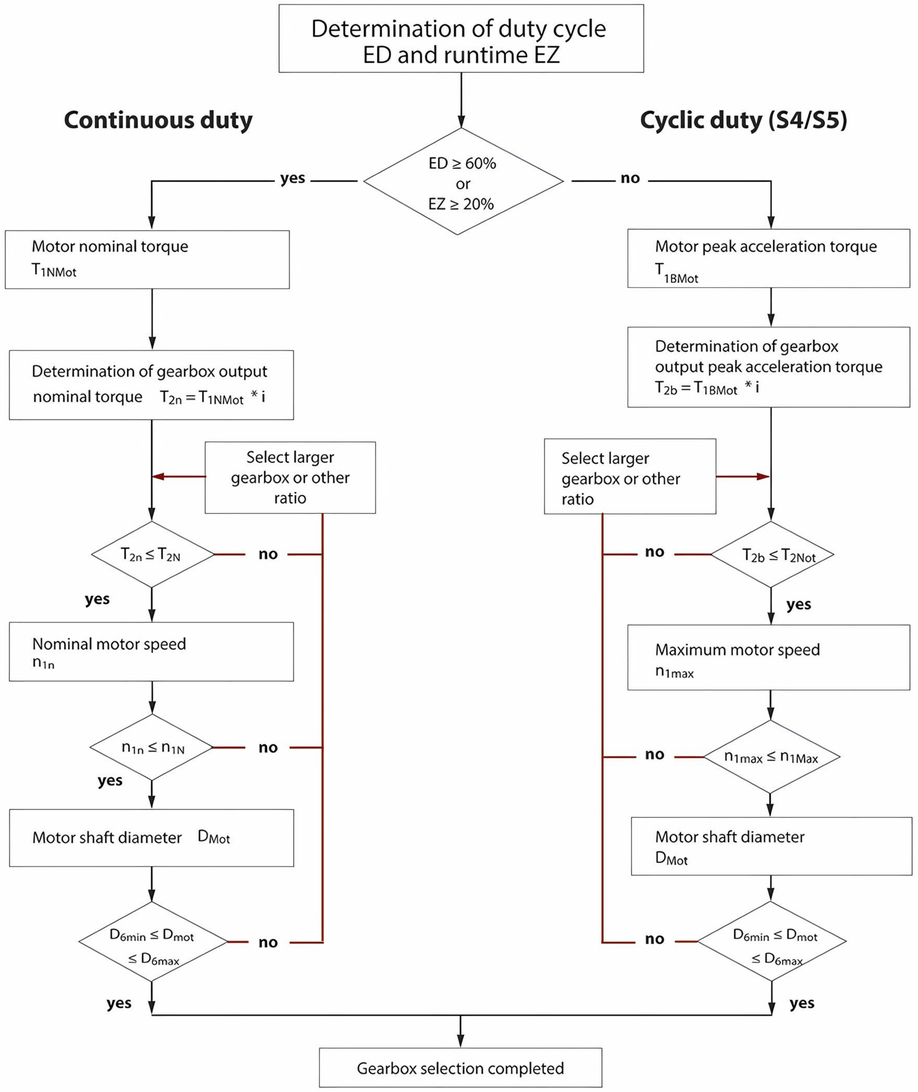

i	from catalogue	n_{1n}	nominal motor speed
T_{2N}	from catalogue	n_{1N}	gearbox nominal input speed from catalogue
T_{2Not}	from catalogue	n_{1max}	maximum motor speed
T_{1BMot}	motor data	n_{1Max}	gearbox maximum input speed from catalogue
T_{1NMot}	motor data		

MOTOREDUCER

MKB SERIES

Powerful, robust and precise, this planetary gearbox is designed to work under heavy operating duty.

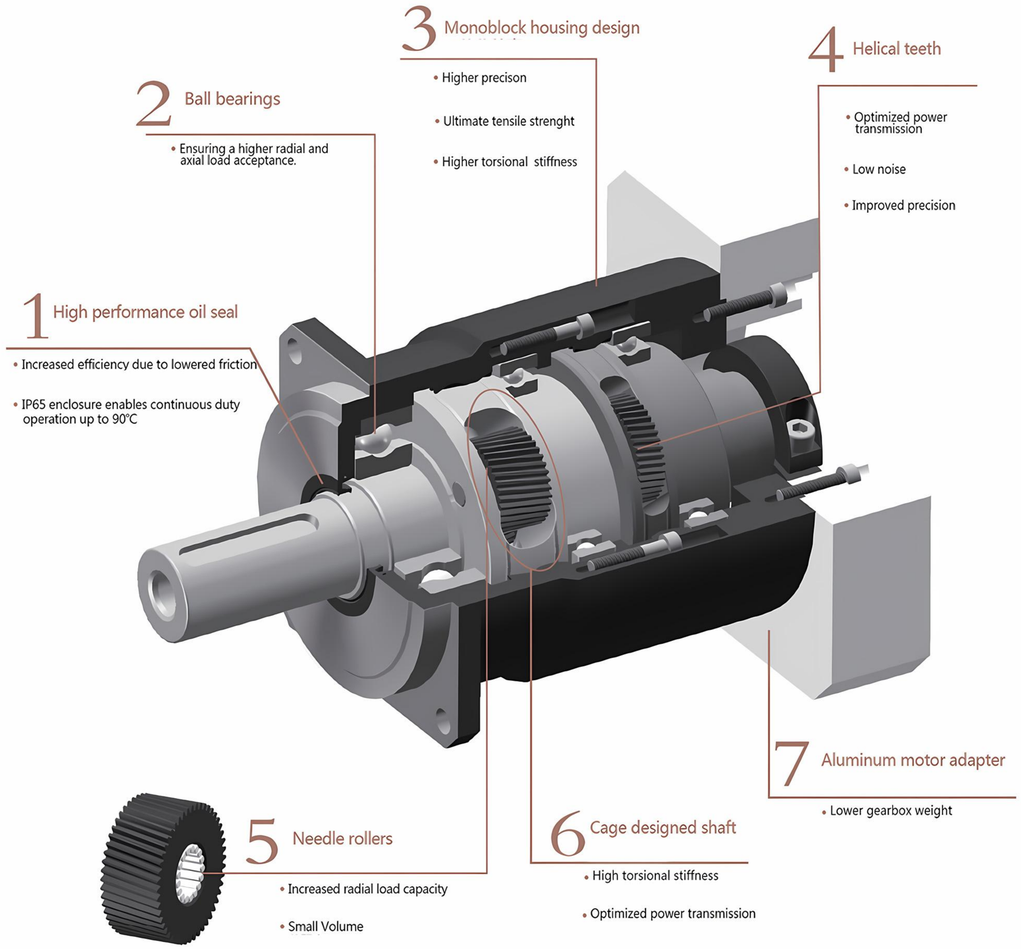

Selection data:

Nominal output torque (Nm)	14-8730
Reduction ratio	3-100
Backlash (arcmin)	1-7
Max.working temperature (℃)	90
Noise (dB)	56-74

MKB

specification		series	Ratio	MKB-040	MKB-060	MKB-090	MKB-120	MKB-140	MKB-180	MKB-220	MKB-240	MKB-300
Rated output torque T_{2N}	Nm	1	3	20	55	130	240	350	600	1100	3000	8450
			4	19	50	140	320	550	1000	1700	3000	8730
			5	22	60	160	360	650	1200	2000	3150	8660
			6	20	55	150	350	600	1100	1900	3150	8520
			7	20	55	150	360	600	1100	1800	3150	8520
			8	20	55	140	360	550	1000	1800	3000	8390
			9	14	40	100	230	450	900	1500	2400	8310
			10	14	40	100	230	450	900	1500	2400	8310
		2	15	20	55	130	240	460	980	1300	3000	8150
			20	19	50	140	320	650	1350	1800	3000	8730
			25	22	60	160	330	650	1200	2000	3150	8660
			30	20	55	150	310	650	1100	1900	3000	8520
			35	20	60	150	360	550	1400	1900	3000	8520
			40	20	55	150	260	500	1000	1600	2800	8440
			45	14	40	100	230	450	900	1500	2700	8300
			50	22	60	160	360	700	1400	2000	3150	8660
			60	20	55	150	310	600	1100	1900	3000	8520
			70	19	50	140	300	550	1100	1800	2900	8520
			80	20	55	140	360	700	1400	1900	3150	8600
			90	14	40	100	230	460	980	1500	2300	8310
			100	14	40	100	230	460	980	1500	2300	8310
Maximum output torque T_{2M}	Nm	1, 2	3～100	3 times the rated output torque								
Rated input speed n_{1N}	rpm	1, 2	3～100	5000	5000	4000	4000	3000	3000	2000	2000	1500
Maximum input speed n_{2M}	rpm	1, 2	3～100	10000	10000	8000	8000	6000	6000	4000	4000	3000
Backlash accuracy_H (high precision)	arcmin	1	3～10	–	–	≤1	≤1	≤1	≤1	≤1	≤1	≤1
		2	15～100	–	–	≤3	≤3	≤3	≤3	≤3	≤3	≤3
Backlash accuracy_P (precision)	arcmin	1	3～10	≤3	≤3	≤3	≤3	≤3	≤3	≤3	≤3	≤3
		2	15～100	≤5	≤5	≤5	≤5	≤5	≤5	≤5	≤5	≤5
Backlash accuracy_S (standard)	arcmin	1	3～10	≤5	≤5	≤5	≤5	≤5	≤5	≤5	≤5	≤5
		2	15～100	≤7	≤7	≤7	≤7	≤7	≤7	≤7	≤7	≤7
Torsional rigidity	Nm/arcmin	1, 2	3～100	3	8	20	41	50	145	225	540	980
Allowable radial force F_{2R}	N	1, 2	3～100	780	1500	3200	6700	9400	14500	50000	85000	224500
Allowable axial force F_{2A}	N	1, 2	3～100	610	1050	2300	4100	8300	13500	25000	56500	112000
working life	hr	1, 2	3～100	20000h								
efficiency η	%	1	3～10	≥97%								
		2	15～100	≥94%								
weight	kg	1	3～100	0.8	1.5	2.6	6.6	15.5	29	48	105	190
		2	15～100	1.3	2	4	9	17	33	60	120	220
Operating temperature	℃	1, 2	3～100	-15℃～+90℃								
lubrication		1, 2	3～100	IP65								
Ingress protection		1, 2	3～100	life Lubricated								
Mounting direction		1, 2	3～100	Any								
Noise level (n_t=3000rqm)	dB	1, 2	3～100	≤56	≤58	≤60	≤63	≤65	≤67	≤70	≤72	≤74

specification		series	Ratio	MKB-040	MKB-060	MKB-090	MKB-120	MKB-140	MKB-180	MKB-220	MKB-240	MKB-300
Inertia J_1	$kg.cm^2$	1	3	0.03	0.16	0.61	3.25	9.21	28.98	69.61	185.05	252.96
			4	0.03	0.14	0.48	2.74	7.54	23.67	54.37	183.43	230.72
			5	0.03	0.13	0.47	2.71	7.42	23.29	53.27	183.43	226.29
			6	0.03	0.13	0.45	2.65	7.25	22.75	51.72	183.43	226.29
			7	0.03	0.13	0.45	2.62	7.14	22.48	50.97	183.43	216.29
			8	0.03	0.13	0.44	2.58	7.07	22.59	50.84	183.43	216.29
			9	0.03	0.13	0.44	2.57	7.04	22.53	50.63	177.26	216.29
			10	0.03	0.13	0.44	2.57	7.03	22.51	50.56	175.39	214.55
		2	15	0.03	0.03	0.13	0.47	2.71	7.42	23.29	53.27	183.43
			20	0.03	0.03	0.13	0.47	2.71	7.42	23.29	53.27	183.43
			25	0.03	0.03	0.13	0.47	2.71	7.42	23.29	53.27	183.43
			30	0.03	0.03	0.13	0.47	2.71	7.42	23.29	53.27	183.43
			35	0.03	0.03	0.13	0.47	2.71	7.42	23.29	53.27	183.43
			40	0.03	0.03	0.13	0.47	2.71	7.42	23.29	53.27	183.43
			45	0.03	0.03	0.13	0.47	2.71	7.42	23.29	53.27	183.43
			50	0.03	0.03	0.13	0.44	2.57	7.03	22.51	50.56	175.39
			60	0.03	0.03	0.13	0.44	2.57	7.03	22.51	50.56	175.39
			70	0.03	0.03	0.13	0.44	2.57	7.03	22.51	50.56	175.39
			80	0.03	0.03	0.13	0.44	2.57	7.03	22.51	50.56	175.39
			90	0.03	0.03	0.13	0.44	2.57	7.03	22.51	50.56	175.39
			100	0.03	0.03	0.13	0.44	2.57	7.03	22.51	50.56	175.39

The output speed of F_{2R} and F_{2A} is 100 rpm, acting at the center of the output shaft.

MKB Series

1-Stage :3,4,5,6,7,8,9,10

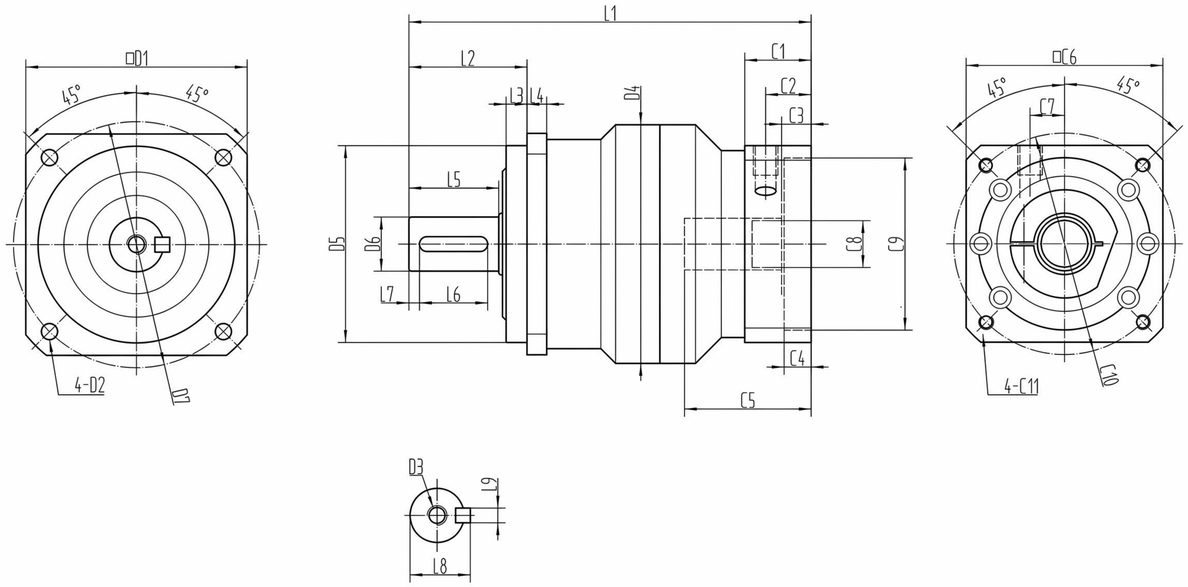

	MKB-040	MKB-060	MKB-090	MKB-120	MKB-140	MKB-180	MKB-220	MKB-240	MKB-300
L1*	89.5	118	163.5	209.5	259	312.5	320	457	504.5
L2	24.5	37	48	65	97	105	138	149	159
L3	4	7	8.5	12	12	20	30	14	14
L4	4	8	8	12	12	15	20	24	28
L5	19.5	28.5	36.5	49.5	82	82	105	130	140
L6	15	25	32	40	65	70	90	125	120
L7	2	2	2	5	5	6	7	3	10
L8	15	18	24.5	35	43	59	79.5	90	106
L9	5	5	6	10	12	16	20	22	28
D1	42	60	90	115	140	180	220	270	342
D2	3.4	5.5	6.6	9	11	13.5	17	17	22
D3	M4*10	M5*12	M8*20	M12*28	M16*36	M20*42	M20*42	M20*42	M24*42
D4	42	65	97	124	150	200	225	270	342
D5	35	50	80	110	130	160	180	200	250
D6	13	16	22	32	40	55	75	85	100
D7	50	70	100	130	165	215	250	300	380
C1*	17.5	23	27	37.5	47	76	50	96	96
C2*	11.5	16	18.5	26	26	55	29	63	63
C3*	7	11	12	19.5	18.5	45	19	48.5	51
C4*	3.5	10.5	11	10	8	10	10	10	10
C5*	29.5	37	51.5	70	81.5	114	88	145	147.5
C6*	42	60	80	130	176	180	200	280	280
C7*	6.5	10.5	14	20	27	30	30	40	40
C8*	8	14	19	24	35	42	38	55	55
C9*	30	50	70	110	114.3	114.3	180	250	250
C10*	46	70	90	145	200	200	215	300	300
C11*	M4*8	M5*10	M6*12	M8*16	M12*25	M12*30	M12*24	M16*32	M16*32

The one with * is a reference, and the size can be adjusted.

MKB Series

2-Stage :15,20,25,30,35,40,45,50,60,70,80,90,100

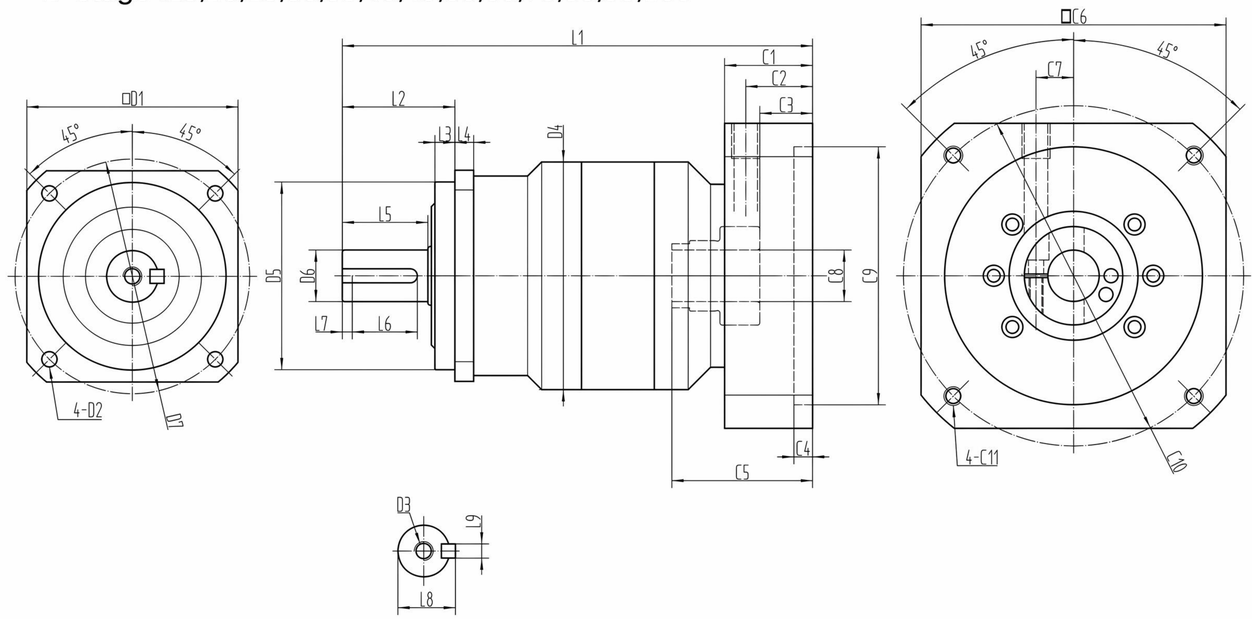

	MKB-040	MKB-060	MKB-090	MKB-120	MKB-140	MKB-180	MKB-220	MKB-240
L1*	106.5	138	190	246.5	310	338.5	397	516
L2	24.5	37	48	65	97	105	138	149
L3	4	7	8.5	12	12	20	30	14
L4	4	8	8	12	12	15	20	24
L5	19.5	28.5	36.5	49.5	82	82	105	130
L6	15	25	32	40	65	70	90	125
L7	2	2	2	5	5	6	7	3
L8	15	18	24.5	35	43	59	79.5	90
L9	5	5	6	10	12	16	20	22
D1	42	60	90	115	140	180	220	270
D2	3.4	5.5	6.6	9	11	13.5	17	17
D3	M4*10	M5*12	M8*20	M12*28	M16*36	M20*42	M20*42	M20*42
D4	42	65	97	124	150	200	225	270
D5	35	50	80	110	130	160	180	200
D6	13	16	22	32	40	55	75	85
D7	50	70	100	130	165	215	250	300
C1*	17.5	23	27	37.5	47	50	72	96
C2*	11.5	16	18.5	26	26	29	58	63
C3*	7	11	12	20	18	19	48	51
C4*	3.5	10.5	11	10	8	10	10	10
C5*	29.5	37	49.5	71.5	85	88	117	145.5
C6*	42	60	80	130	176	200	220	280
C7*	6.5	10.5	14	20	27	30	35	40
C8*	8	14	19	24	35	38	55	55
C9*	30	50	70	110	114.3	180	200	250
C10*	46	70	90	145	200	215	235	300
C11*	M4*8	M5*12	M6*12	M8*16	M12*25	M12*24	M12*24	M16*36

The one with * is a reference, and the size can be adjusted.

MKB Series

2-Stage(Smaller type) :15,20,25,30,35,40,45,50,60,70,80,90,100

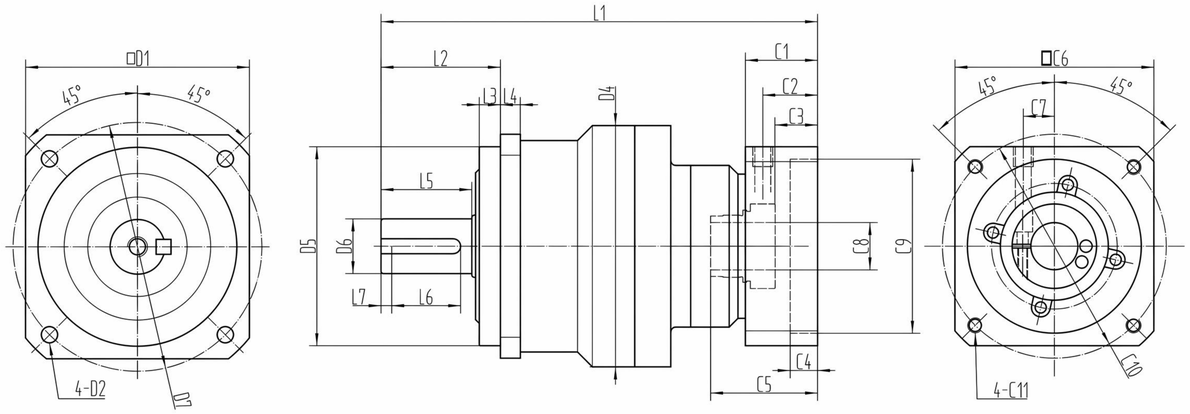

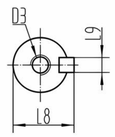

	MKB-090	MKB-120	MKB-140	MKB-180	MKB-220	MKB-240
L1*	169.5	214.5	284	327	397	459.5
L2	48	65	97	105	138	149
L3	8.5	12	12	20	30	14
L4	8	12	12	15	20	24
L5	36.5	49.5	82	82	105	130
L6	32	40	65	70	90	125
L7	2	5	5	6	7	3
L8	24.5	35	43	59	79.5	90
L9	6	10	12	16	20	22
D1	90	115	140	180	220	270
D2	6.6	9	11	13.5	17	17
D3	M8*20	M12*28	M16*36	M20*42	M20*42	M20*42
D4	97	124	150	200	225	270
D5	80	110	130	160	180	200
D6	22	32	40	55	75	85
D7	100	130	165	215	250	300
C1*	23	27	37.5	47	79	50
C2*	16	18.5	26	26	58	29
C3*	11	12	20	18	48	19
C4*	10.5	11	10	8	10	10
C5*	37	49.5	71.5	85	117	88
C6*	60	80	130	176	176	220
C7*	10.5	14	20	27	30	30
C8*	14	19	24	35	42	38
C9*	50	70	110	114.3	114.3	180
C10*	70	90	145	200	200	215
C10*	M5*10	M6*12	M8*15	M12*24	M12*24	M12*24

The one with * is a reference, and the size can be adjusted.

MOTOREDUCER

MKE SERIES

Powerful, robust and precise, this planetary gearbox is designed to work under heavy operating duty.

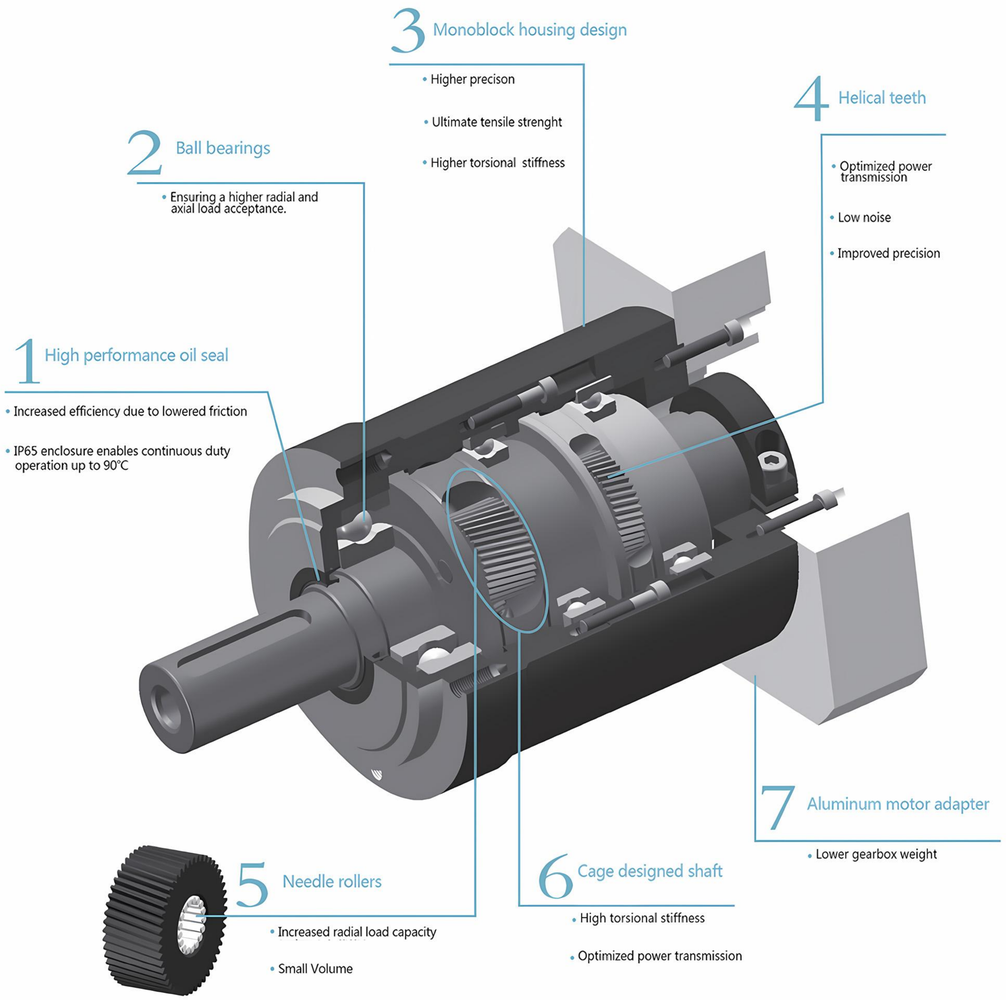

MKE

Selection data:

Nominal output torque (Nm)	14-8730
Reduction ratio	3-100
Backlash (arcmin)	1-7
Max.working temperature (℃)	90
Noise (dB)	56-74

specification		series	Ratio	MKE-040	MKE-060	MKE-090	MKE-120	MKE-155	MKE-205	MKE-235	MKE-270	MKE-330
Rated output torque T_{2N}	Nm	1	3	20	55	130	240	350	600	1100	3000	8450
			4	19	50	140	320	550	1000	1700	3000	8730
			5	22	60	160	360	650	1200	2000	3150	8660
			6	20	55	150	350	600	1100	1900	3150	8520
			7	20	55	150	360	600	1100	1800	3150	8520
			8	20	55	140	360	550	1000	1800	3000	8390
			9	14	40	100	230	450	900	1500	2400	8310
			10	14	40	100	230	450	900	1500	2400	8310
		2	15	20	55	130	240	460	980	1300	3000	8150
			20	19	50	140	320	650	1350	1800	3000	8730
			25	22	60	160	330	650	1200	2000	3150	8660
			30	20	55	150	310	650	1100	1900	3000	8520
			35	20	60	150	360	550	1400	1900	3000	8520
			40	20	55	150	260	500	1000	1600	2800	8440
			45	14	40	100	230	450	900	1500	2700	8300
			50	22	60	160	360	700	1400	2000	3150	8660
			60	20	55	150	310	600	1100	1900	3000	8520
			70	19	50	140	300	550	1100	1800	2900	8520
			80	20	55	140	360	700	1400	1900	3150	8600
			90	14	40	100	230	460	980	1500	2300	8310
			100	14	40	100	230	460	980	1500	2300	8310
Maximum output torque T_{2M}	Nm	1, 2	3～100	3 times the rated output torque								
Rated input speed n_{1N}	rpm	1, 2	3～100	5000	5000	4000	4000	3000	3000	2000	2000	1500
Maximum input speed n_{2M}	rpm	1, 2	3～100	10000	10000	8000	8000	6000	6000	4000	4000	3000
Backlash accuracy_H (high precision)	arcmin	1	3～10	–	–	≤1	≤1	≤1	≤1	≤1	≤1	≤1
		2	15～100	–	–	≤3	≤3	≤3	≤3	≤3	≤3	≤3
Backlash accuracy_P (precision)	arcmin	1	3～10	≤3	≤3	≤3	≤3	≤3	≤3	≤3	≤3	≤3
		2	15～100	≤5	≤5	≤5	≤5	≤5	≤5	≤5	≤5	≤5
Backlash accuracy_S (standard)	arcmin	1	3～10	≤5	≤5	≤5	≤5	≤5	≤5	≤5	≤5	≤5
		2	15～100	≤7	≤7	≤7	≤7	≤7	≤7	≤7	≤7	≤7
Torsional rigidity	Nm/arcmin	1, 2	3～100	3	8	20	41	50	145	225	540	980
Allowable radial force F_{2R}	N	1, 2	3～100	780	1500	3200	6700	9400	14500	50000	85000	224500
Allowable axial force F_{2A}	N	1, 2	3～100	610	1050	2300	4100	8300	13500	25000	56500	112000
Working life	hr	1, 2	3～100	20000h								
efficiency η	%	1	3～10	≥97%								
		2	15～100	≥94%								
weight	kg	1	3～100	0.8	1.5	2.6	6.6	15.5	29	48	105	190
		2	15～100	1.3	2	4	9	17	33	60	120	220
Operating temperature	℃	1, 2	3～100	-15℃～+90℃								
lubrication		1, 2	3～100	IP65								
Ingress protection		1, 2	3～100	life Lubricated								
Mounting direction		1, 2	3～100	Any								
Noise level (n_t=3000rpm)	dB	1, 2	3～100	≤56	≤58	≤60	≤63	≤65	≤67	≤70	≤72	≤74

specification		series	Ratio	MKE-040	MKE-060	MKE-090	MKE-120	MKE-155	MKE-205	MKE-235	MKE-270	MKE-330
Inertia J_1	kg.cm²	1	3	0.03	0.16	0.61	3.25	9.21	28.98	69.61	185.05	252.96
			4	0.03	0.14	0.48	2.74	7.54	23.67	54.37	183.43	230.72
			5	0.03	0.13	0.47	2.71	7.42	23.29	53.27	183.43	226.29
			6	0.03	0.13	0.45	2.65	7.25	22.75	51.72	183.43	226.29
			7	0.03	0.13	0.45	2.62	7.14	22.48	50.97	183.43	216.29
			8	0.03	0.13	0.44	2.58	7.07	22.59	50.84	183.43	216.29
			9	0.03	0.13	0.44	2.57	7.04	22.53	50.63	177.26	216.29
			10	0.03	0.13	0.44	2.57	7.03	22.51	50.56	175.39	214.55
		2	15	0.03	0.03	0.13	0.47	2.71	7.42	23.29	53.27	183.43
			20	0.03	0.03	0.13	0.47	2.71	7.42	23.29	53.27	183.43
			25	0.03	0.03	0.13	0.47	2.71	7.42	23.29	53.27	183.43
			30	0.03	0.03	0.13	0.47	2.71	7.42	23.29	53.27	183.43
			35	0.03	0.03	0.13	0.47	2.71	7.42	23.29	53.27	183.43
			40	0.03	0.03	0.13	0.47	2.71	7.42	23.29	53.27	183.43
			45	0.03	0.03	0.13	0.47	2.71	7.42	23.29	53.27	183.43
			50	0.03	0.03	0.13	0.44	2.57	7.03	22.51	50.56	175.39
			60	0.03	0.03	0.13	0.44	2.57	7.03	22.51	50.56	175.39
			70	0.03	0.03	0.13	0.44	2.57	7.03	22.51	50.56	175.39
			80	0.03	0.03	0.13	0.44	2.57	7.03	22.51	50.56	175.39
			90	0.03	0.03	0.13	0.44	2.57	7.03	22.51	50.56	175.39
			100	0.03	0.03	0.13	0.44	2.57	7.03	22.51	50.56	175.39

The output speed of F_{2R} and F_{2A} is 100 rpm, acting at the center of the output shaft.

MKE Series

1-Stage(Smaller type) :3,4,5,6,7,8,9,10

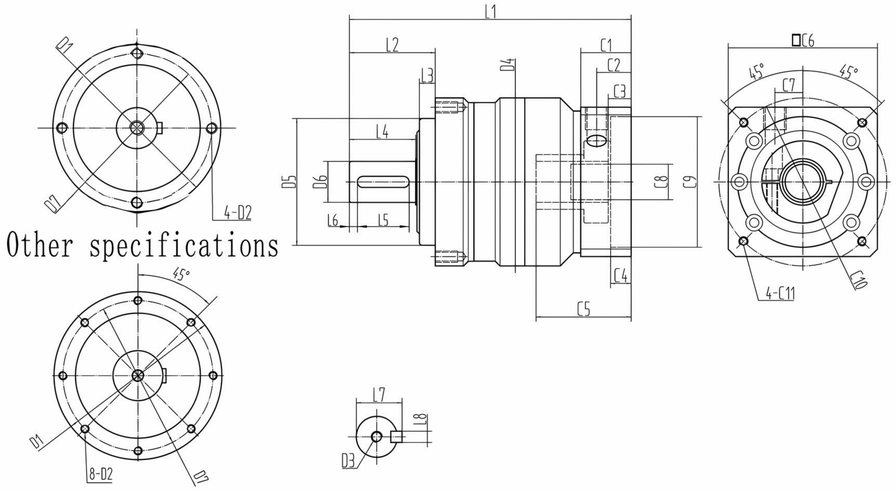

	MKE-040	MKE-060	MKE-090	MKE-120	MKE-155	MKE-205	MKE-235	MKE-270
L1*	89.5	118	151	201.5	259	312.5	320	457
L2	24.5	36.5	46	68.5	97	100	126	173
L3	4	6.5	8.5	17.5	12	15	18	38
L4	19.5	28.5	35.5	49.5	82	82	105	130
L5	15	25	32	40	65	70	90	125
L6	2	2	2	5	5	6	7	3
L7	13.5	18	24.5	35	43	59	79.5	90
L8	4	5	6	10	12	16	20	22
D1	50	70	90	120	155	205	235	270
D2	M4*8	M5*10	M6*12	M8*16	M10*20	M12*24	M16*28	M12*24
D3	M4*10	M5*13	M8*20	M12*28	M16*36	M20*42	M20*42	M20*42
D4	46	65	90	122	150	200	225	265
D5	35	52	68	90	120	160	180	200
D6	12	16	22	32	40	55	75	85
D7	44	62	80	108	140	184	210	240
C1*	17.5	23	27	37.5	47	76	50	96
C2*	11.5	16	18.5	26	26	55	29	63
C3*	7	11	12	20.5	18.5	45	19	48.5
C4*	3.5	10.5	11	10	8	10	10	10
C5*	29.5	32	51	72	81.5	114	88	145
C6*	42	60	80	130	176	180	200	280
C7*	6.5	10.5	14	20	27	30	30	40
C8*	8	14	19	24	35	42	38	55
C9*	30	50	70	110	114.3	114.3	180	250
C10*	46	70	90	145	200	200	215	300
C11*	M4*8	M5*10	M6*12	M8*15	M12*25	M12*25	M12*24	M16*32

The one with * is a reference, and the size can be adjusted.

MKESeries

2-Stage :15,20,25,30,35,40,45,50,60,70,80,90,100

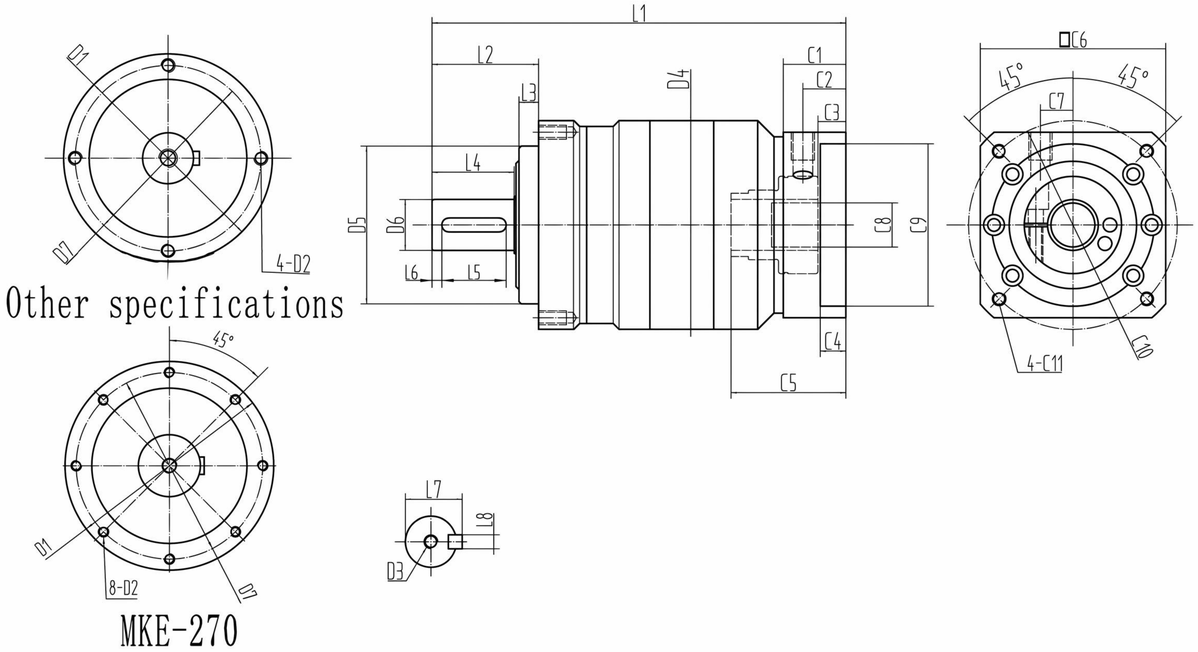

	MKE-040	MKE-060	MKE-090	MKE-120	MKE-155	MKE-205	MKE-235	MKE-270
L1*	106.5	138	178.5	235	310	338.5	397	516
L2	24.5	36.5	46	68.5	97	100	126	173
L3	4	6.5	8.5	17	12	15	18	38
L4	19.5	28.5	35.5	49.5	82	82	105	130
L5	15	25	32	40	65	70	90	125
L6	2	2	2	5	5	6	7	3
L7	13.5	18	24.5	35	43	59	79.5	90
L8	4	5	6	10	12	16	20	22
D1	50	70	90	120	155	205	235	270
D2	M4*8	M5*10	M6*12	M8*16	M10*20	M12*24	M16*28	M12*24
D3	M4*10	M5*13	M8*20	M12*28	M16*36	M20*42	M20*42	M20*42
D4	46	65	90	122	150	200	225	265
D5	35	52	68	90	120	160	180	200
D6	12	16	22	32	40	55	75	85
D7	44	62	80	108	140	184	210	240
C1*	17.5	23	27	37.5	47	50	72	96
C2*	11.5	16	18.5	26	26	29	58	63
C3*	7	11	12	20	18	19	48	51
C4*	3.5	10.5	11	10	8	10	10	10
C5*	29.5	37	49.5	71.5	85	88	117	145.5
C6*	42	60	80	130	176	200	220	280
C7*	6.5	10.5	14	20	27	30	35	40
C8*	8	14	19	24	35	38	55	55
C9*	30	50	70	110	114.3	180	200	250
C10*	46	70	90	145	200	215	235	300
C11*	M4*8	M5*10	M6*12	M8*16	M12*25	M12*24	M12*24	M16*36

The one with * is a reference, and the size can be adjusted.

MKE Series

2-Stage(Smaller type) :15,20,25,30,35,40,45,50,60,70,80,90,100

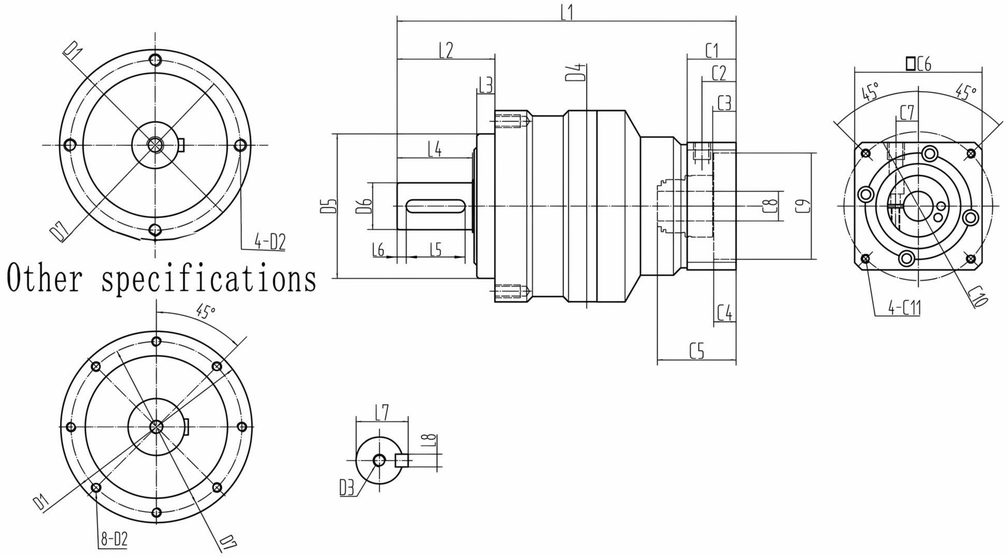

MKE-270

	MKE-090	MKE-120	MKE-155	MKE-205	MKE-235	MKE-270
L1*	159.5	203.5	284	327	394	459.5
L2	46	68.5	97	100	126	173
L3	8.5	17.5	12	15	18	38
L4	35.5	49.5	82	82	105	130
L5	32	40	65	70	90	125
L6	2	5	5	6	7	3
L7	24.5	35	43	59	79.5	90
L8	6	10	12	16	20	22
D1	90	120	155	205	235	270
D2	M6*12	M8*16	M10*20	M12*24	M16*28	M12*24
D3	M8*20	M12*28	M16*36	M20*42	M20*42	M20*42
D4	90	122	150	200	225	265
D5	68	90	120	160	180	200
D6	22	32	40	55	75	85
D7	80	108	140	184	210	240
C1*	23	27	37.5	47	76	50
C2*	16	18.5	26	26	55	29
C3*	11	12	21	18	45	19
C4*	10.5	11	10	8	10	10
C5*	37	49.5	72.5	85	114	88
C6*	60	80	130	176	180	220
C7*	10.5	14	20	27	30	30
C8*	14	19	24	35	42	38
C9*	50	70	110	114.3	114.3	180
C10*	70	90	145	200	200	215
C11*	M5*12	M6*12	M8*15	M12*25	M12*24	M12*24

The one with * is a reference, and the size can be adjusted.

MOTOREDUCER

MKD SERIES

The MKD high-end series symbolize optimum precision, maximum torque and resistance to radial & axial loads.

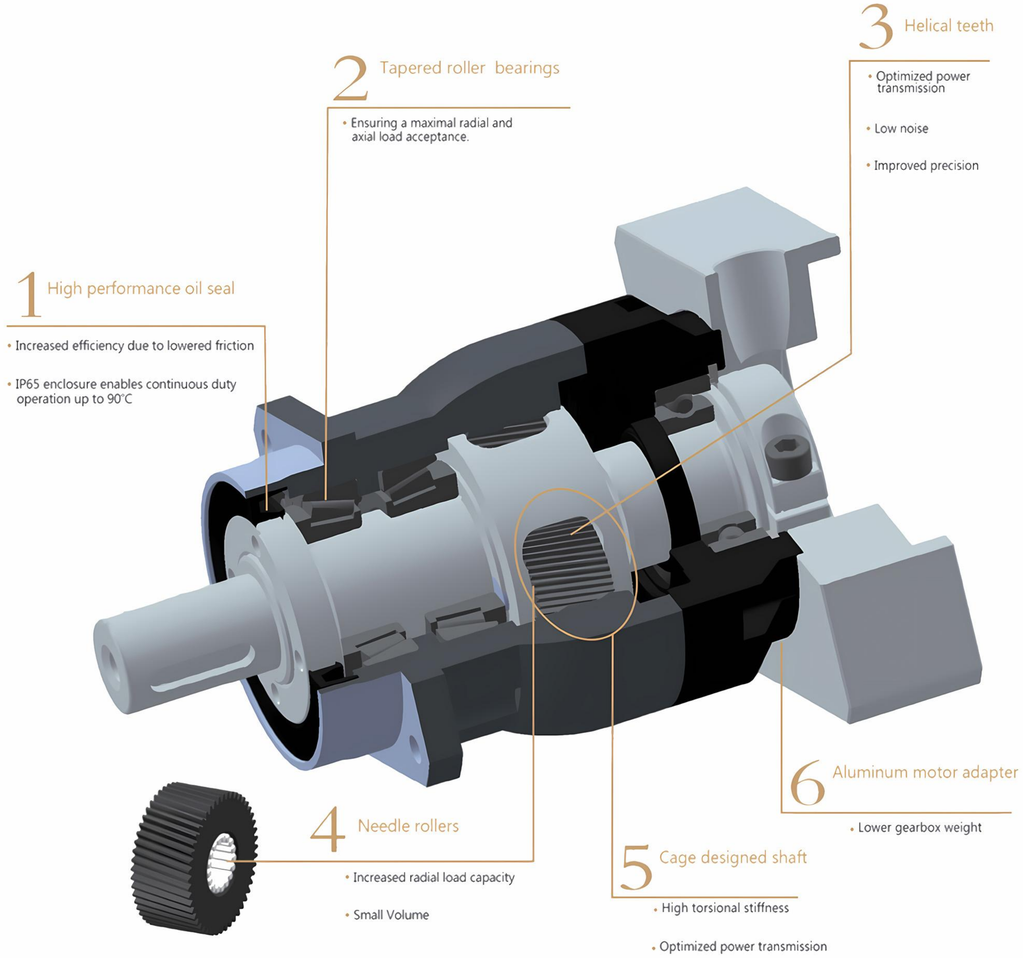

MKD

Selection data:

Nominal output torque (Nm)	40-3150
Reduction ratio	3-100
Backlash (arcmin)	1-7
Max.working temperature (℃)	90
Noise (dB)	58-72

specification		series	Ratio	MKD-060	MKD-075	MKD-100	MKD-140	MKD-180	MKD-210	MKD-240
Rated output torque T_{2N}	Nm	1	3	55	130	240	350	1100	2000	3000
			4	50	140	320	550	1700	2100	3000
			5	60	160	360	650	2000	2200	3150
			6	55	150	350	600	1900	2200	3150
			7	55	150	360	600	1800	2200	3150
			8	55	140	360	550	1800	2200	3000
			9	40	100	230	450	1500	2000	2400
			10	40	100	230	450	1500	2000	2400
		2	15	55	130	240	460	1300	2400	3000
			20	50	140	320	650	1800	2400	3000
			25	60	160	330	650	2000	2550	3150
			30	55	150	310	650	1900	2500	3000
			35	60	150	360	550	1900	2500	3000
			40	55	150	260	500	1600	2000	2800
			45	40	100	230	450	1500	2000	2700
			50	60	160	360	700	2000	2550	3150
			60	55	150	310	600	1900	2500	3000
			70	50	140	300	550	1800	2500	2900
			80	55	140	360	700	1900	2550	3150
			90	40	100	230	460	1500	2000	2300
			100	40	100	230	460	1500	2000	2300
Maximum output torque T_{2M}	Nm	1, 2	3～100	3 times the rated output torque						
Rated input speed n_{1N}	rpm	1, 2	3～100	5000	4000	4000	3000	3000	2000	2000
Maximum input speed n_{2M}	rpm	1, 2	3～100	10000	8000	8000	6000	6000	4000	4000
Backlash accuracy_H (high precision)	arcmin	1	3～10	-	≤1	≤1	≤1	≤1	≤1	≤1
		2	15～100	-	≤3	≤3	≤3	≤3	≤3	≤3
Backlash accuracy_P (precision)	arcmin	1	3～10	≤3	≤3	≤3	≤3	≤3	≤3	≤3
		2	15～100	≤5	≤5	≤5	≤5	≤5	≤5	≤5
Backlash accuracy_S (standard)	arcmin	1	3～10	≤5	≤5	≤5	≤5	≤5	≤5	≤5
		2	15～100	≤7	≤7	≤7	≤7	≤7	≤7	≤7
Torsional rigidity	Nm/arcmin	1, 2	3～100	7	14	31	53	175	400	540
Allowable radial force F_{2R}	N	1, 2	3～100	3000	4200	9200	14000	18500	33000	44000
Allowable axial force F_{2A}	N	1, 2	3～100	2700	3900	6200	11400	19500	21000	37000
Working life	hr	1, 2	3～100	20000h						
efficiency η	%	1	3～10	≥97%						
		2	15～100	≥94%						
weight	kg	1	3～100	2.1	4	12.5	24	40	72.5	105
		2	15～100	2.6	5.4	14	27	45.8	79.5	115
Operating temperature	℃	1, 2	3～100	-15℃～+90℃						
lubrication		1, 2	3～100	IP65						
Ingress protection		1, 2	3～100	life Lubricated						
Mounting direction		1, 2	3～100	Any						
Noise level (n_1=3000rpm)	dB	1, 2	3～100	≤58	≤60	≤63	≤65	≤67	≤70	≤72

specification		series	Ratio	MKD-060	MKD-075	MKD-100	MKD-140	MKD-180	MKD-210	MKD-240
Inertia J_1	$kg.cm^2$	1	3	0.16	0.61	3.25	9.21	28.98	69.61	185.05
			4	0.14	0.48	2.74	7.54	23.67	54.37	183.43
			5	0.13	0.47	2.71	7.42	23.29	53.27	183.43
			6	0.13	0.45	2.65	7.25	22.75	51.72	183.43
			7	0.13	0.45	2.62	7.14	22.48	50.97	183.43
			8	0.13	0.44	2.58	7.07	22.59	50.84	183.43
			9	0.13	0.44	2.57	7.04	22.53	50.63	177.26
			10	0.13	0.44	2.57	7.03	22.51	50.56	175.39
		2	15	0.03	0.13	0.47	2.71	7.42	23.29	53.27
			20	0.03	0.13	0.47	2.71	7.42	23.29	53.27
			25	0.03	0.13	0.47	2.71	7.42	23.29	53.27
			30	0.03	0.13	0.47	2.71	7.42	23.29	53.27
			35	0.03	0.13	0.47	2.71	7.42	23.29	53.27
			40	0.03	0.13	0.47	2.71	7.42	23.29	53.27
			45	0.03	0.13	0.47	2.71	7.42	23.29	53.27
			50	0.03	0.13	0.44	2.57	7.03	22.51	50.56
			60	0.03	0.13	0.44	2.57	7.03	22.51	50.56
			70	0.03	0.13	0.44	2.57	7.03	22.51	50.56
			80	0.03	0.13	0.44	2.57	7.03	22.51	50.56
			90	0.03	0.13	0.44	2.57	7.03	22.51	50.56
			100	0.03	0.13	0.44	2.57	7.03	22.51	50.56

The output speed of F_{2R} and F_{2A} is 100 rpm, acting at the center of the output shaft.

MKD Series

1-Stage :3,4,5,6,7,8,9,10

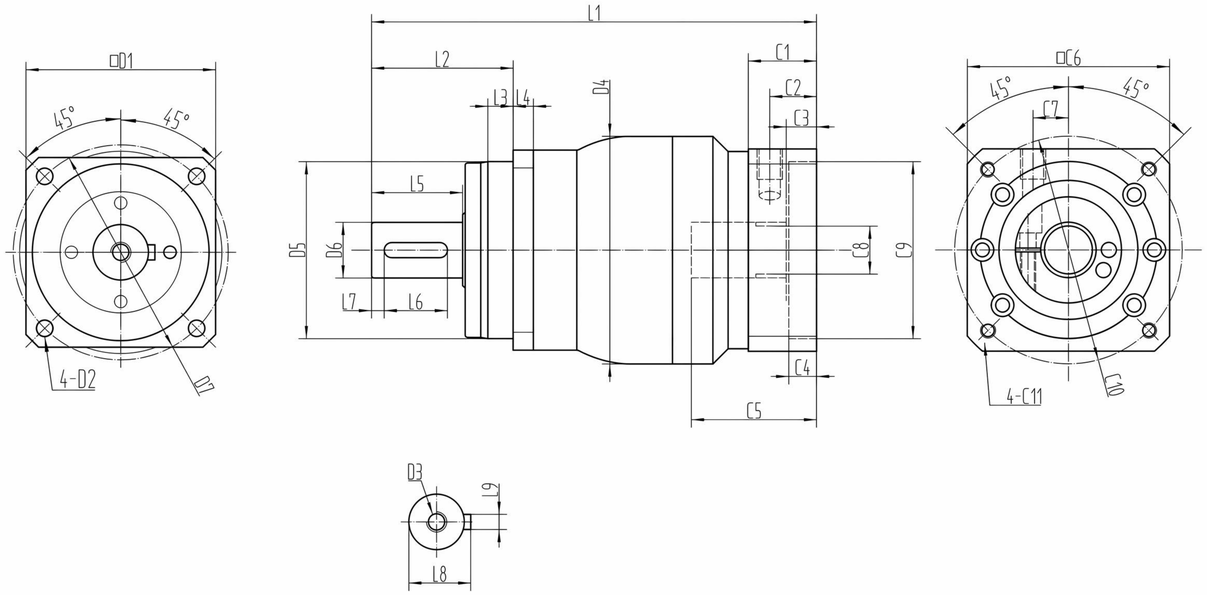

	MKD-060	MKD-075	MKD-100	MKD-140	MKD-180	MKD-210	MKD-240
L1*	137	176	240	299	367	408. 5	481. 5
L2	48	56	88	112	112	143	170
L3	4. 5	10	8	10	27	15	37
L4	6	8	10	12	15	17	20
L5	28	36	58	82	82	105	130
L6	22	25	40	70	70	90	125
L7	2	5	10	5	6	7	3
L8	18	24. 5	35	43	59	79. 5	90
L9	5	6	10	12	16	20	22
D1	60	77. 5	101. 5	140	182	210	245
D2	5. 5	6. 6	9	11	13. 5	17	17
D3	M5*13	M8*20	M12*28	M16*36	M20*42	M20*42	M20*42
D4	65	90	116	151	205	241	265
D5	60	70	90	130	160	180	200
D6	16	22	32	40	55	75	85
D7	68	85	120	165	215	250	290
C1*	23	27	37. 5	47	76	50	65
C2*	16	18. 5	26	26	55	29	44
C3*	11	12	19. 5	14	45	16	29. 5
C4*	10. 5	11	10	8	10	10	10
C5*	37	49. 5	71	85. 5	114	87	124
C6*	60	80	130	176	180	200	266
C7*	10. 5	14	20	27	30	30	38
C8*	14	19	24	35	42	38	55
C9*	50	70	110	114. 3	114. 3	180	250
C10*	70	90	145	200	200	215	300
C11*	M5*12	M6*12	M8*16	M12*25	M12*24	M12*24	M16*32

The one with * is a reference, and the size can be adjusted.

MKD Series

2-Stage :15,20,25,30,35,40,45,50,60,70,80,90,100

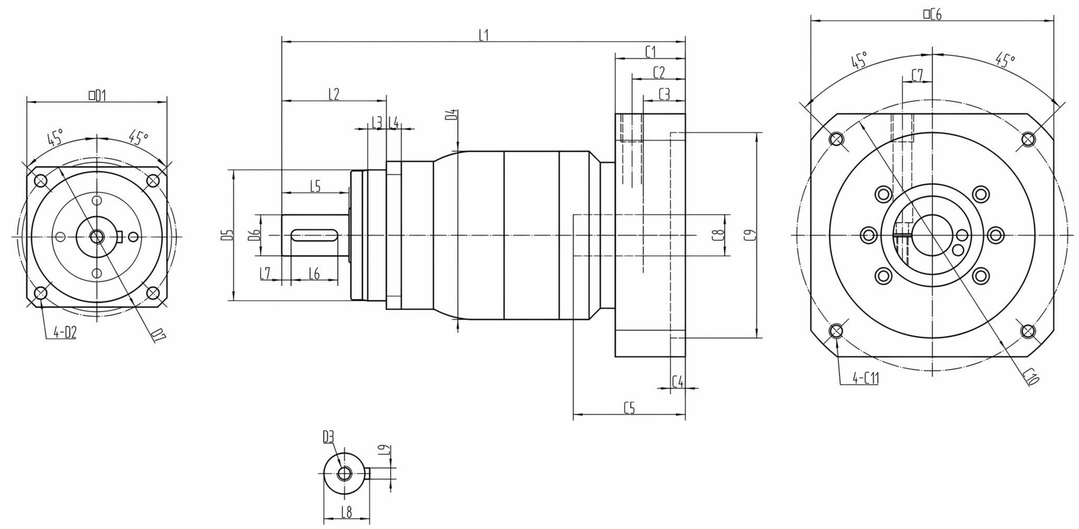

	MKD-060	MKD-075	MKD-100	MKD-140	MKD-180	MKD-210	MKD-240
L1*	157	205. 5	274. 5	334. 5	396. 5	513	579. 5
L2	48	56	88	112	112	143	170
L3	5	10	8	10	27	35	37
L4	6	8	10	12	15	17	20
L5	28	36	58	82	82	105	130
L6	22	25	40	70	70	90	125
L7	2	5	10	5	6	7	3
L8	18	24. 5	35	43	59	79. 5	90
L9	5	6	10	12	16	20	22
D1	60	77. 5	101. 5	140	182	210	245
D2	5. 5	6. 6	9	11	13. 5	17	17
D3	M5*13	M8*20	M12*28	M16*36	M20*42	M20*42	M20*42
D4	65	90	116	150	205	241	265
D5	60	70	90	130	160	180	200
D6	16	22	32	40	55	75	85
D7	68	85	120	165	215	250	290
C1*	23	27	37. 5	47	50	72	96
C2*	16	18. 5	26	26	29	57	63
C3*	11	12	19. 5	14	19	48	48. 5
C4*	10. 5	11	10	8	10	10	10
C5*	36. 5	49. 5	71	81	88	125	149
C6*	60	80	130	176	200	220	280
C7*	10. 5	14	20	27	30	35	40
C8*	14	19	24	35	38	55	55
C9*	50	70	110	114. 3	180	200	250
C10*	70	90	145	200	215	235	300
C11*	M5*12	M6*15	M8*16	M12*25	M12*20	M12*24	M16*32

The one with * is a reference, and the size can be adjusted.

MKD Series

2-Stage(Smaller type) :15,20,25,30,35,40,45,50,60,70,80,90,100

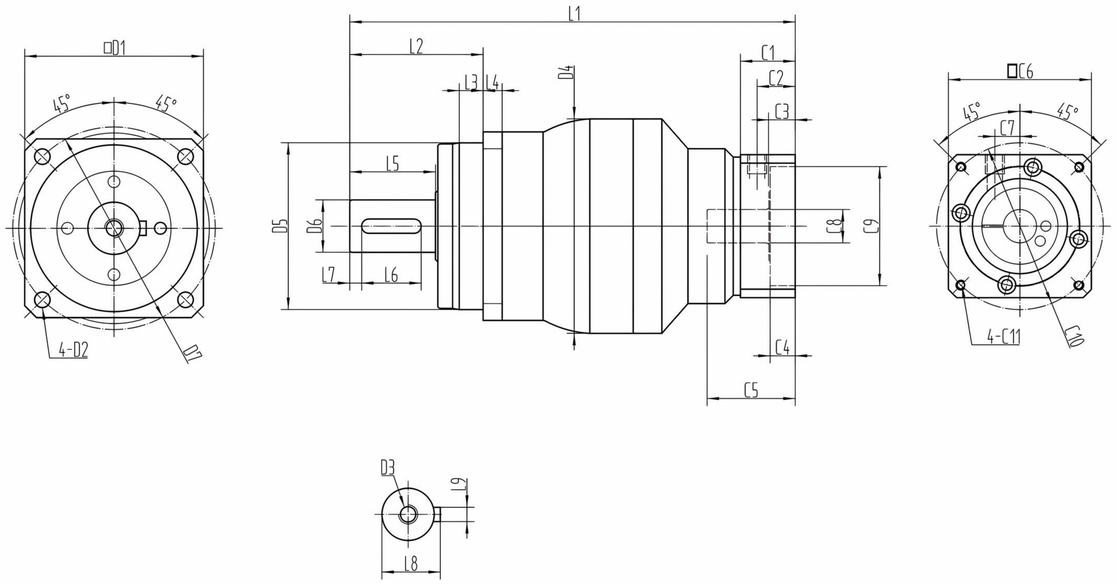

	MKD-075	MKD-100	MKD-140	MKD-180	MKD-210	MKD-240
L1*	187	243. 5	317. 5	377. 5	491	499. 5
L2	56	88	112	112	143	170
L3	10	8	10	12	15	16
L4	8	10	12	15	17	20
L5	36	58	82	82	105	130
L6	25	40	70	70	90	125
L7	5	10	5	6	7	3
L8	24. 5	35	43	59	79. 5	90
L9	6	10	12	16	20	22
D1	77. 5	101. 5	140	182	210	245
D2	6. 6	9	11	13. 5	17	17
D3	M8*20	M12*28	M16*36	M20*42	M20*42	M20*42
D4	90	116	150	205	241	265
D5	70	90	130	160	180	200
D6	22	32	40	55	75	85
D7	85	120	165	215	250	290
C1*	23	27	37. 5	47	76	50
C2*	16	18. 5	26	26	55	29
C3*	11	12	20	18	45	19
C4*	10. 5	11	10	8	10	10
C5*	37	49. 5	71. 5	85	114	88
C6*	60	80	130	176	180	200
C7*	10. 5	14	20	27	30	30
C8*	14	19	24	35	42	38
C9*	50	70	110	114. 3	114. 3	180
C10*	70	90	145	200	200	215
C11*	M5*10	M6*12	M8*16	M12*24	M12*24	M12*30

The one with * is a reference, and the size can be adjusted.

MOTOREDUCER

MKF SERIES

High-performance series for heaviest operating duties, **MKF** gearboxes present high torsional stiffness, maximum power, optimum precision and compactness.

Selection data:

Nominal output torque (Nm)	14-3150
Reduction ratio	4-100
Backlash (arcmin)	1-7
Max.working temperature (℃)	90
Noise (dB)	56-72

MKF

specification		series	Ratio	MKF-047	MKF-064	MKF-090	MKF-110	MKF-140	MKF-200	MKF-255	MKF-285
Rated output torque T2N	Nm	1	4	19	50	140	320	550	1000	2100	3000
			5	22	60	160	360	650	1200	2200	3150
			6	20	55	150	350	600	1100	2200	3150
			7	20	55	150	360	600	1100	2200	3150
			8	20	55	140	360	550	1000	2200	3000
			9	14	40	100	230	450	900	1600	2400
			10	14	40	100	230	450	900	1500	2400
		2	20	19	50	140	320	650	1350	2400	3000
			25	22	60	160	330	650	1200	2550	3150
			30	20	55	150	310	650	1100	2500	3000
			35	20	60	150	360	550	1400	2500	3000
			40	20	55	150	260	500	1000	1600	2800
			45	14	40	100	230	450	900	1500	2700
			50	22	60	160	360	700	1400	2550	3150
			60	20	55	150	310	600	1100	2500	3000
			70	19	50	140	300	550	1100	2500	2900
			80	20	55	140	360	700	1400	2550	3150
			90	14	40	100	230	460	980	1600	2300
			100	14	40	100	230	460	980	1500	2300
Maximum output torque T_{2M}	Nm	1, 2	3～100	3 times the rated output torque							
Rated input speed n_{1N}	rpm	1, 2	3～100	5000	5000	4000	4000	3000	3000	2000	2000
Maximum input speed n_{2M}	rpm	1, 2	3～100	10000	10000	8000	8000	6000	6000	4000	4000
Backlash accuracy_H (high precision)	arcmin	1	3～10	–	–	≤1	≤1	≤1	≤1	≤1	≤1
		2	15～100	–	–	≤3	≤3	≤3	≤3	≤3	≤3
Backlash accuracy_P (precision)	arcmin	1	3～10	≤3	≤3	≤3	≤3	≤3	≤3	≤3	≤3
		2	15～100	≤5	≤5	≤5	≤5	≤5	≤5	≤5	≤5
Backlash accuracy_S (standard)	arcmin	1	3～10	≤5	≤5	≤5	≤5	≤5	≤5	≤5	≤5
		2	15～100	≤7	≤7	≤7	≤7	≤7	≤7	≤7	≤7
Torsional rigidity	Nm/arcmin	1, 2	3～100	7	13	31	82	151	450	1023	1300
Allowable radial force F_{2R}	N	1, 2	3～100	55	110	270	440	1335	3280	5500	8800
Allowable axial force F_{2A}	N	1, 2	3～100	990	1050	2850	4000	10590	16660	29430	37000
Working life	hr	1, 2	3～100	20000h							
efficiency η	%	1	3～10	≥97%							
		2	15～100	≥94%							
weight	kg	1	3～100	0.7	1.45	4.1	6.2	15.8	31.6	71	105
		2	15～100	1	2.5	5	10	21.1	36.7	85	114
Operating temperature	℃	1, 2	3～100	-15℃～+90℃							
lubrication		1, 2	3～100	IP65							
Ingress protection		1, 2	3～100	life Lubricated							
Mounting direction		1, 2	3～100	Any							
Noise level (n_t=3000rqm)	dB	1, 2	3～100	≤56	≤58	≤60	≤63	≤65	≤67	≤70	≤72

specification		series	Ratio	MKF-047	MKF-064	MKF-090	MKF-110	MKF-140	MKF-200	MKF-255	MKF-285
Inertia J1	$kg.cm^2$	1	4	0.03	0.14	0.48	2.74	7.54	23.67	54.37	183.43
			5	0.03	0.13	0.47	2.71	7.42	23.29	53.27	183.43
			6	0.03	0.13	0.45	2.65	7.25	22.75	51.72	183.43
			7	0.03	0.13	0.45	2.62	7.14	22.48	50.97	183.43
			8	0.03	0.13	0.44	2.58	7.07	22.59	50.84	183.43
			9	0.03	0.13	0.44	2.57	7.04	22.53	50.63	177.26
			10	0.03	0.13	0.44	2.57	7.03	22.51	50.56	175.39
		2	20	0.03	0.03	0.13	0.47	2.71	7.42	23.29	53.27
			25	0.03	0.03	0.13	0.47	2.71	7.42	23.29	53.27
			30	0.03	0.03	0.13	0.47	2.71	7.42	23.29	53.27
			35	0.03	0.03	0.13	0.47	2.71	7.42	23.29	53.27
			40	0.03	0.03	0.13	0.47	2.71	7.42	23.29	53.27
			45	0.03	0.03	0.13	0.47	2.71	7.42	23.29	53.27
			50	0.03	0.03	0.13	0.44	2.57	7.03	22.51	50.56
			60	0.03	0.03	0.13	0.44	2.57	7.03	22.51	50.56
			70	0.03	0.03	0.13	0.44	2.57	7.03	22.51	50.56
			80	0.03	0.03	0.13	0.44	2.57	7.03	22.51	50.56
			90	0.03	0.03	0.13	0.44	2.57	7.03	22.51	50.56
			100	0.03	0.03	0.13	0.44	2.57	7.03	22.51	50.56

The output speed of F_{2R} and F_{2A} is 100 rpm, acting at the center of the output shaft.

MKF Series

1-Stage :3,4,5,6,7,8,9,10

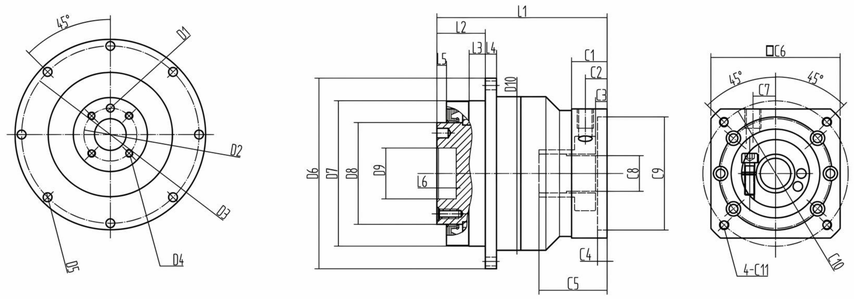

MKF-047

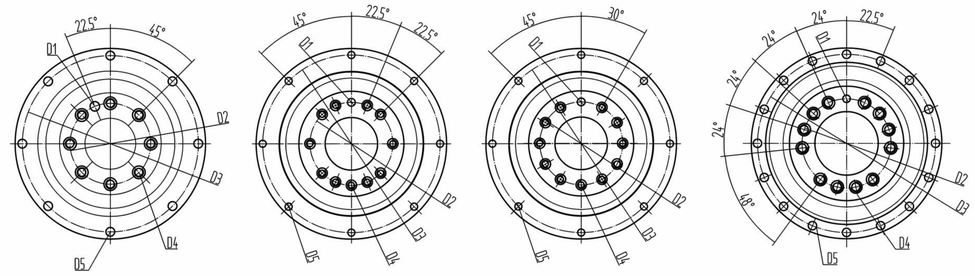

MKF-064/090 MKF-110 MKF-140/200 MKF-255/285

	MKF-047	MKF-064	MKF-090	MKF-110	MKF-140	MKF-200	MKF-255	MKF-285
L1*	68.5	85.5	105.5	151.5	173	222	225.5	271
L2	19.5	19.5	30	29	38	50	66	75
L3	7	7	10	10	14.5	15	20	20
L4	4	4	7	8	10	12	18	20
L5	3	3	6	6	6	8	12	16.5
L6	4	8	12	13	12	16	20	20
D1	φ3*3	φ5*8	φ6*7	φ6*7	φ8*7	φ10*10	φ12*10	φ20*20
D2	20	31.5	50	63	80	125	140	160
D3	67	79	109	135	168	233	280	310
D4	4-M3*6	7-M5*8	8-M6*12	11-M6*12	11-M8*17	11-M10*20	12-M16*25	12-M20*31
D5	8-φ3.5	8-φ4.5	8-φ5.5	8-φ5.5	12-φ6.6	12-φ9	16-φ13.5	16-φ13.5
D6	72	86	118	145	179	247	300	330
D7	47	64	90	110	140	200	255	285
D8	28	40	63	80	100	160	180	200
D9	12	20	31.5	40	50	80	100	120
D10	60	70	95	120	150	200	255	285
C1*	17.5	23	22	37.5	47	76	50	62
C2*	11.5	16	13.5	27	26	55	29	29
C3*	8.5	11	7	20	18	45	19	14.5
C4*	3.5	10.5	6	10	8	10	10	10
C5*	30.5	37	44.5	71.5	85	114	90.5	115
C6*	42	60	80	130	176	180	200	280
C7*	6.5	10.5	14	20	27	30	30	40
C8*	8	14	19	24	35	42	38	55
C9*	30	50	70	110	114.3	114.3	180	250
C10*	46	70	90	145	200	200	215	300
C11*	M4*8	M5*10	M6*12	M8*16	M12*25	M12*24	M12*25	M16*32

The one with * is a reference, and the size can be adjusted.

MKF Series

2-Stage :15,20,25,30,35,40,45,50,60,70,80,90,100

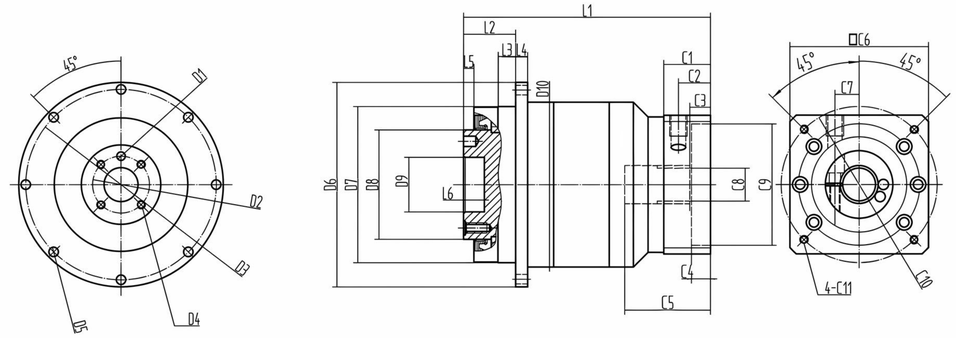

MKF-047

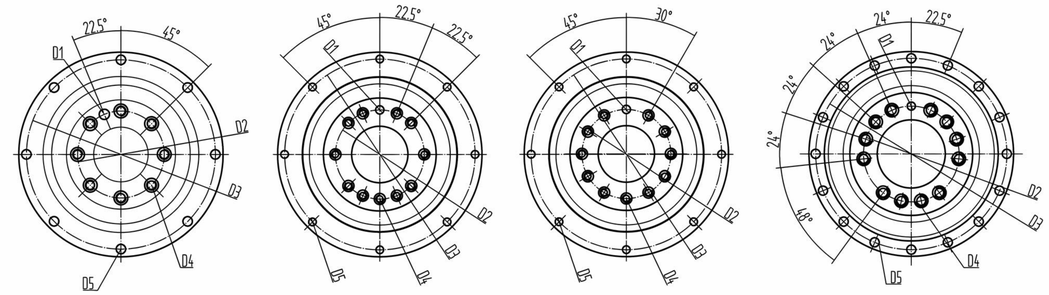

MKF-064/090 MKF-110 MKF-140/200 MKF-255/285

	MKF-047	MKF-064	MKF-090	MKF-110	MKF-140	MKF-200	MKF-255	MKF-285
L1*	86	109	142.5	185.5	218	252.5	342.5	361
L2	19.5	19.5	30	29	38	50	66	75
L3	7	7	10	10	14.5	15	20	20
L4	4	4	7	8	10	12	18	20
L5	3	3	6	6	6	8	12	16.5
L6	4	8	12	13	12	16	20	20
D1	φ3*3	φ5*8	φ6*7	φ6*7	φ8*7	φ10*10	φ12*10	φ20*20
D2	20	31.5	50	63	80	125	140	160
D3	67	79	109	135	168	233	280	310
D4	4-M3*6	7-M5*8	8-M6*12	11-M6*12	11-M8*17	11-M10*20	12-M16*25	12-M20*31
D5	8-φ3.5	8-φ4.5	8-φ5.5	8-φ5.5	12-φ6.6	12-φ9	16-φ13.5	16-φ13.5
D6	72	86	118	145	179	247	300	330
D7	47	64	90	110	140	200	255	285
D8	28	40	63	80	100	160	180	200
D9	12	20	31.5	40	50	80	100	120
D10	60	70	95	120	150	200	255	285
C1*	17.5	23	27	37.5	47	50	66.5	62
C2*	11.5	16	18.5	26	26	29	33.5	29
C3*	8.5	11	12	20	18	19	19	14.5
C4*	3.5	10.5	11	10	8	10	10	10
C5*	29.5	37	49.5	71.5	85	88	119.5	115
C6*	42	60	80	130	176	180	225	280
C7*	6.5	10.5	14	20	27	30	40	40
C8*	8	14	19	24	35	38	55	55
C9*	30	50	70	110	114.3	180	200	250
C10*	46	70	90	145	200	215	235	300
C11*	M4*8	M5*10	M6*12	M8*15	M12*24	M12*24	M12*24	M16*32

The one with * is a reference, and the size can be adjusted.

MKF Series

2-Stage(Smaller type) :15,20,25,30,35,40,45,50,60,70,80,90,100

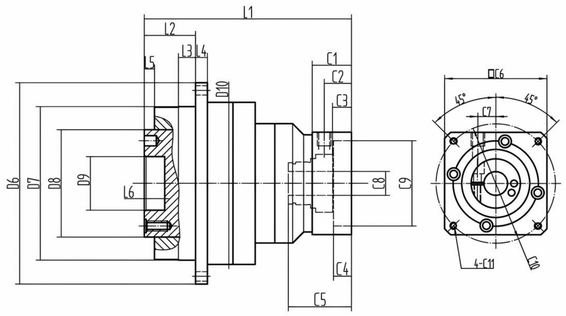

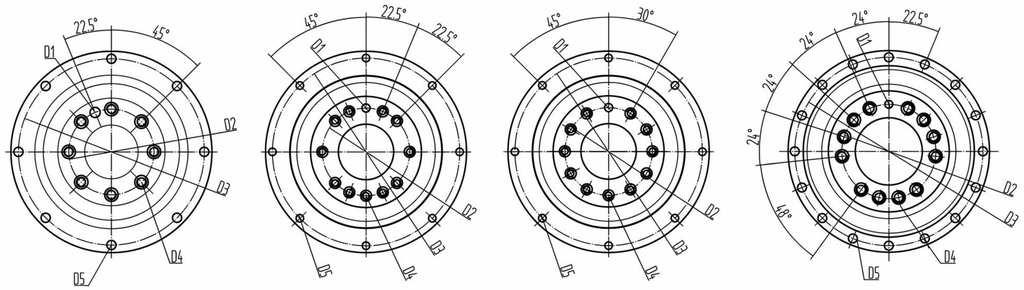

MKF-090 MKF-110 MKF-140/200 MKF-255/285

	MKF-090	MKF-110	MKF-140	MKF-200	MKF-255	MKF-285
L1*	121.5	157.5	203.5	242.5	308	331
L2	30	29	38	50	66	75
L3	10	10	14.5	15	20	20
L4	7	8	10	12	18	20
L5	6	6	6	8	12	16.5
L6	12	13	12	16	20	20
D1	φ6*7	φ6*7	φ8*7	φ10*10	φ12*10	φ20*20
D2	50	63	80	125	140	160
D3	109	135	168	233	280	310
D4	8-M6*12	11-M6*12	11-M8*17	11-M10*20	12-M16*25	12-M20*31
D5	8-φ5.5	8-φ5.5	12-φ6.6	12-φ9	16-φ13.5	16-φ13.5
D6	118	145	179	247	300	330
D7	90	110	140	200	255	285
D8	63	80	100	160	180	200
D9	31.5	40	50	80	100	120
D10	95	120	150	200	255	285
C1*	23	27	37.5	47	76	50
C2*	16	18.5	26	26	55	29
C3*	11	12	20	18	45	19
C4*	10.5	11	10	8	10	10
C5*	37	49.5	71.5	85	114	90.5
C6*	60	80	130	176	180	200
C7*	10.5	14	20	27	30	30
C8*	14	19	24	35	42	38
C9*	50	70	110	114.3	114.3	180
C10*	70	90	145	200	200	215
C11*	M5*10	M6*12	M8*16	M12*25	M12*24	M12*25

The one with * is a reference, and the size can be adjusted.

MOTOREDUCER

MKBR SERIES

A high-performance right-angle solution for servo applications that keeps **MKBR** design and characteristics.

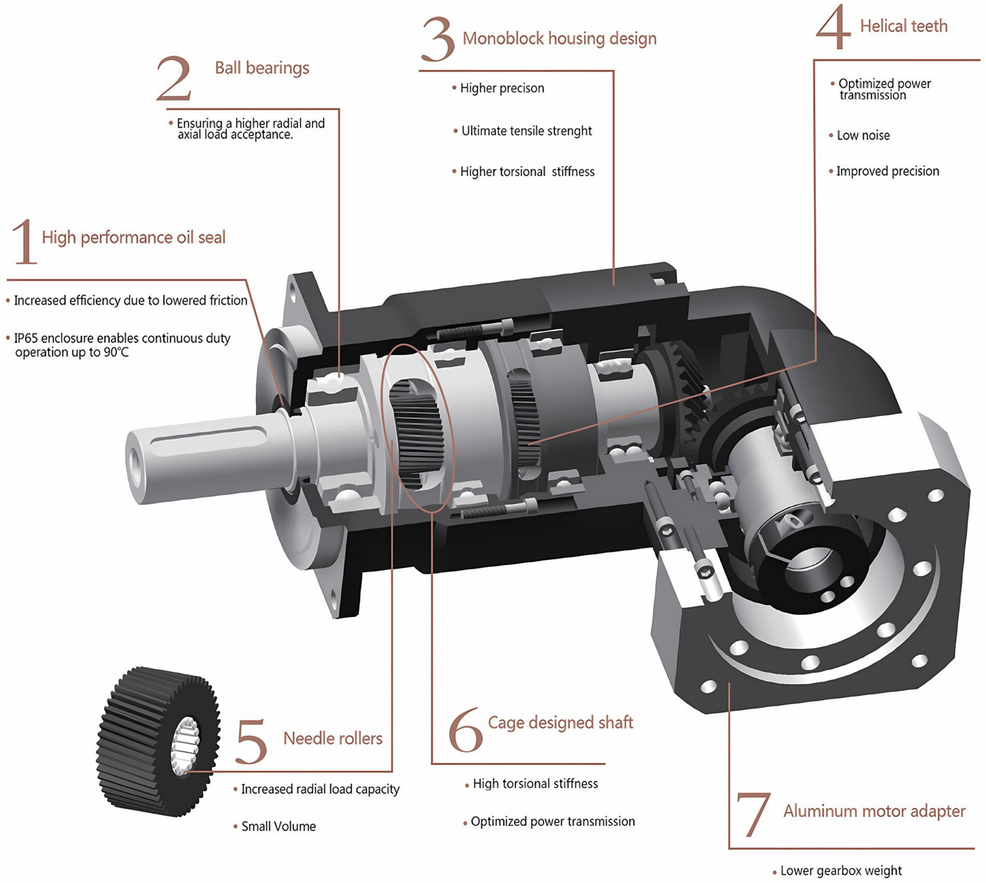

MKBR

Selection data:

Nominal output torque (Nm)	9-2000
Reduction ratio	3-100
Backlash (arcmin)	4-9
Max.working temperature (℃)	90
Noise (dB)	61-74

specification		series	Ratio	MKBR-040	MKBR-060	MKBR-090	MKBR-120	MKBR-140	MKBR-180	MKBR-220
Rated output torque T_{2N}	Nm	1	3	9	36	90	195	342	588	1140
			4	12	48	120	200	520	1040	1680
			5	15	60	150	260	650	1200	2000
			6	18	55	150	325	600	1100	1900
			7	19	50	140	310	550	1100	1800
			8	17	45	120	300	500	1000	1600
			9	14	40	100	260	450	900	1500
			10	14	40	100	230	450	900	1500
		2	15	14	30	65	200	400	880	1200
			20	14	30	85	300	600	1250	1700
			25	15	60	150	325	650	1200	2000
			30	20	55	150	310	600	1100	1900
			35	19	50	140	300	550	1100	1800
			40	17	45	120	260	500	1000	1600
			45	14	40	100	230	450	900	1500
			50	14	60	100	230	600	1200	2000
			60	20	55	150	310	550	1100	1900
			70	19	50	140	300	500	1100	1800
			80	17	45	120	260	600	1000	1600
			90	14	40	100	230	450	900	1500
			100	14	40	100	230	450	900	1500
Maximum output torque T_{2M}	Nm	1, 2	3～100	3 times the rated output torque						
Rated input speed n_{1N}	rpm	1, 2	3～100	5000	5000	4000	4000	3000	3000	2000
Maximum input speed n_{2M}	rpm	1, 2	3～100	10000	10000	8000	8000	6000	6000	4000
Backlash accuracy_H (high precision)	arcmin	1	3～10	–	–	–	–	–	–	–
		2	15～100	–	–	–	–	–	–	–
Backlash accuracy_P (precision)	arcmin	1	3～10	≤4	≤4	≤4	≤4	≤4	≤4	≤4
		2	15～100	≤7	≤7	≤7	≤7	≤7	≤7	≤7
Backlash accuracy_S (standard)	arcmin	1	3～10	≤6	≤6	≤6	≤6	≤6	≤6	≤6
		2	15～100	≤9	≤9	≤9	≤9	≤9	≤9	≤9
Torsional rigidity	Nm/arcmin	1, 2	3～100	3	8	20	41	50	145	225
Allowable radial force F_{2R}	N	1, 2	3～100	780	1500	3200	6700	9400	14500	50000
Allowable axial force F_{2A}	N	1, 2	3～100	610	1050	2300	4100	8300	13500	25000
Working life	hr	1, 2	3～100	20000h						
efficiency η	%	1	3～10	≥95%						
		2	15～100	≥92%						
weight	kg	1	3～100	1	2.8	6.1	13	26.3	51	83
		2	15～100	1.5	3.2	7.7	14.2	28.5	54	95
Operating temperature	℃	1, 2	3～100	-15℃～+90℃						
lubrication		1, 2	3～100	IP65						
Ingress protection		1, 2	3～100	life Lubricated						
Mounting direction		1, 2	3～100	Any						
Noise level (n_1=3000rpm)	dB	1, 2	3～100	≤61	≤63	≤65	≤68	≤70	≤72	≤74

specification		series	Ratio	MKBR-040	MKBR-060	MKBR-090	MKBR-120	MKBR-140	MKBR-180	MKBR-220
Inertia J_1	$kg.cm^2$	1	3～10	0.09	0.35	2.25	6.84	21.8	95.6	135.4
		2	12～100	0.09	0.09	0.35	2.25	6.84	21.8	95.6

The output speed of F_{2R} and F_{2A} is 100 rpm, acting at the center of the output shaft.

MKBR Series

1-Stage :3,4,5,6,7,8,9,10

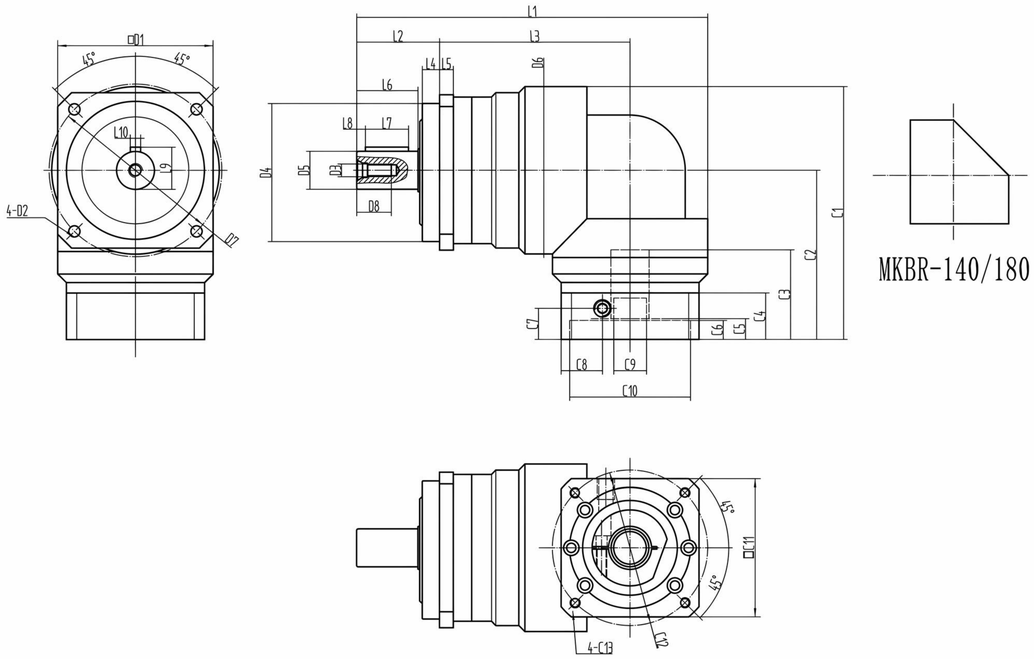

	MKBR-040	MKBR-060	MKBR-090	MKBR-120	MKBR-140	MKBR-180
L1*	109	159	203.5	261	346	406.5
L2	24.5	37	48	65	97	105
L3	63.5	89.5	110.5	135	174	211.5
L4	4	7	10	12	12	20
L5	4	8	8	12	12	15
L6	19.5	28.5	35.5	49.5	82	82
L7	15	25	32	40	65	70
L8	2	2	2	5	5	6
L9	15	18	24.5	35	43	59
L10	5	5	6	10	12	16
D1	42	60	90	115	140	180
D2	3.4	5.5	6.6	9	11	13.5
D3	M4	M5	M8	M12	M16	M20
D4	35	50	80	110	130	160
D5	13	16	22	32	40	55
D6	46	70	97	122	150	200
D7	50	70	100	130	165	215
D8	10	12	20	28	36	42
C1*	70	115.5	146.5	187.5	236.5	339.5
C2*	47	80.5	98	126.5	161.5	239.5
C3*	27	35	52	71	83	116
C4*	17.5	23	27	37.5	47	97
C5*	7	11	11	17	16	65
C6*	3.5	10.5	11	10	8	10
C7*	11.5	16	18	26	26	76
C8*	11.75	19.5	24	45	61	60
C9*	8	14	19	24	35	42
C10*	30	50	70	110	114.3	114.3
C11*	42	60	80	130	176	176
C12*	46	70	90	145	200	200
C13*	M4*8	M5*10	M5*10	M8*16	M12*24	M12*28

The one with * is a reference, and the size can be adjusted.

MKBR Series

2-Stage :15,20,25,30,35,40,45,50,60,70,80,90,100

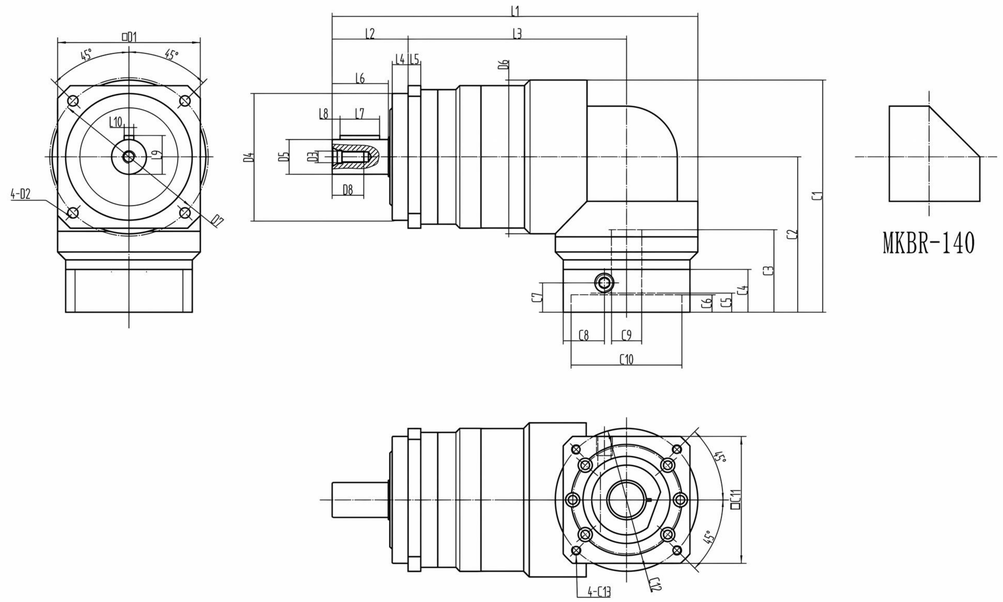

	MKBR-040	MKBR-060	MKBR-090	MKBR-120	MKBR-140
L1*	124	179	231	294.5	390
L2	24.5	37	48	65	97
L3	78.5	109.5	138	168.5	218
L4	4	7	10	12	12
L5	4	8	8	12	12
L6	19.5	28.5	35.5	49.5	82
L7	15	25	30	40	65
L8	2	2	2	5	5
L9	15	18	24.5	35	43
L10	5	5	6	10	12
D1	42	60	90	115	140
D2	3.4	5.5	6.6	9	11
D3	M4	M5	M8	M12	M16
D4	35	50	80	110	130
D5	13	16	22	32	40
D6	46	70	97	122	150
D7	50	70	100	130	165
D8	10	12	20	28	36
C1*	70	115.5	146.5	187.5	236.5
C2*	47	80.5	98	126.5	161.5
C3*	27	35	52	71	83
C4*	17.5	23	27	37.5	47
C5*	7	11	12	17	16
C6*	3.5	10.5	11	10	8
C7*	11.5	16	18.5	26	26
C8*	14.5	19.5	24	40	61
C9*	8	14	19	22	35
C10*	30	50	70	110	114.3
C11*	42	60	80	130	176
C12*	46	70	90	145	200
C13*	M4*8	M5*10	M6*12	M8*16	M12*24

The one with * is a reference, and the size can be adjusted.

MKBR Series

2-Stage(Smaller type) :15,20,25,30,35,40,45,50,60,70,80,90,100

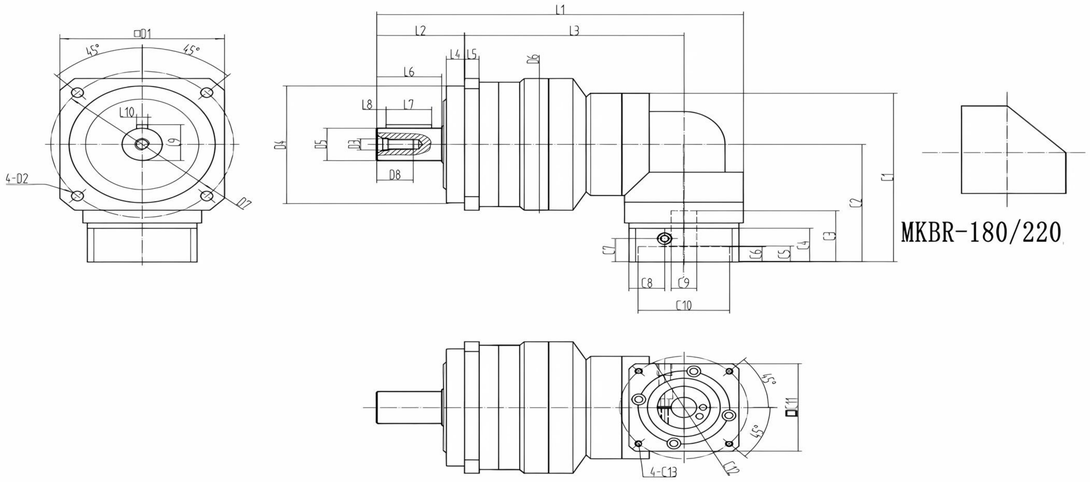

	MKBR-090	MKBR-120	MKBR-140	MKBR-180	MKBR-220
L1*	200.5	256	343.5	407	488
L2	48	65	97	105	138
L3	120	146	185.5	227	260
L4	10	12	12	20	30
L5	8	12	12	15	20
L6	35.5	49.5	82	82	105
L7	30	40	65	70	90
L8	2	5	5	6	7
L9	24.5	35	43	59	79.5
L10	6	10	12	16	20
D1	90	115	140	180	220
D2	6.6	9	11	13.5	17
D3	M8	M12	M16	M20	M20
D4	80	110	130	160	180
D5	22	32	40	55	75
D6	90	122	150	200	225
D7	100	130	165	215	250
D8	20	28	36	42	42
C1*	125.5	159	201.5	261.5	352
C2*	80.5	98	126.5	161.5	239.5
C3*	35	53	71	83	118
C4*	23	27	37.5	47	97
C5*	11	12	17	16	67
C6*	10.5	11	10	8	10
C7*	16	18	25	26	76
C8*	19.5	24	45	64	60
C9*	14	19	24	35	42
C10*	50	70	110	114.3	114.3
C11*	60	80	130	176	176
C12*	70	90	145	200	200
C13*	M5*10	M6*12	M8*16	M12*24	M12*24

The one with * is a reference, and the size can be adjusted.

MOTOREDUCER

MKERSERIES

A high-performance right-angle solution for servo applications that keeps MKER design and characteristics.

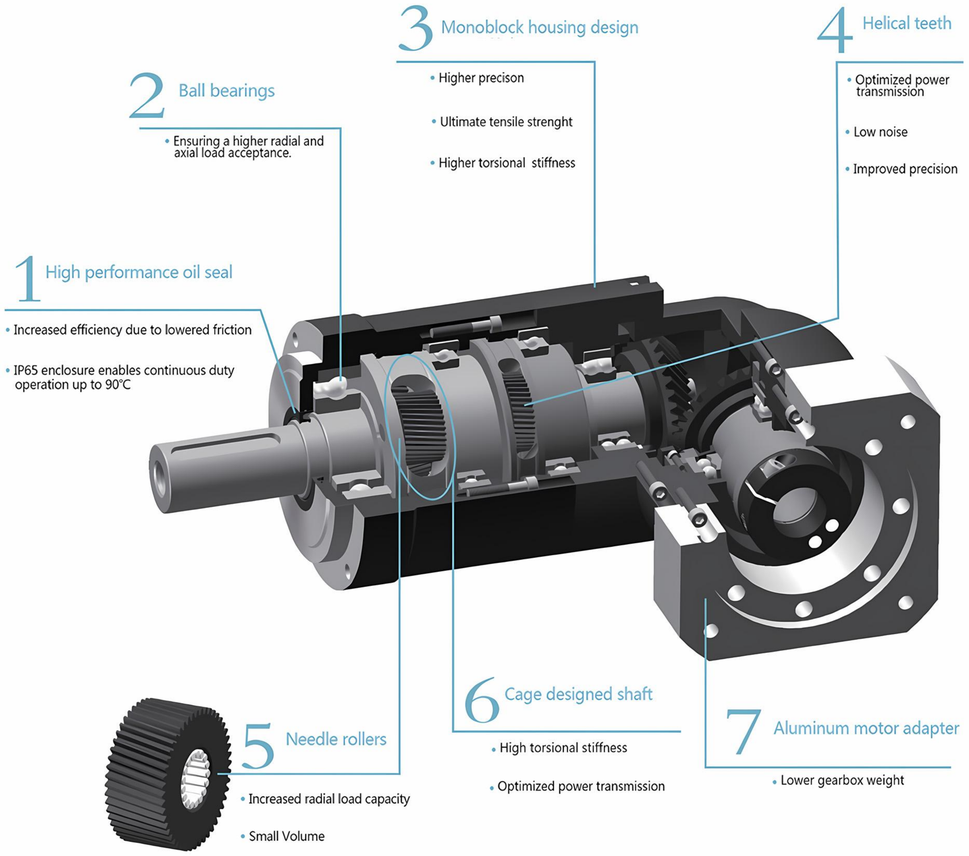

Selection data:

Nominal output torque (Nm)	9-2000
Reduction ratio	3-100
Backlash (arcmin)	4-9
Max.working temperature (℃)	90
Noise (dB)	61-74

MKER

specification		series	Ratio	MKER-040	MKER-060	MKER-090	MKER-120	MKER-155	MKER-205	MKER-235
Rated output torque T_{2N}	Nm	1	3	9	36	90	195	342	588	1140
			4	12	48	120	200	520	1040	1680
			5	15	60	150	260	650	1200	2000
			6	18	55	150	325	600	1100	1900
			7	19	50	140	310	550	1100	1800
			8	17	45	120	300	500	1000	1600
			9	14	40	100	260	450	900	1500
			10	14	40	100	230	450	900	1500
		2	15	14	30	65	200	400	880	1200
			20	14	30	85	300	600	1250	1700
			25	15	60	150	325	650	1200	2000
			30	20	55	150	310	600	1100	1900
			35	19	50	140	300	550	1100	1800
			40	17	45	120	260	500	1000	1600
			45	14	40	100	230	450	900	1500
			50	14	60	100	230	600	1200	2000
			60	20	55	150	310	550	1100	1900
			70	19	50	140	300	500	1100	1800
			80	17	45	120	260	600	1000	1600
			90	14	40	100	230	450	900	1500
			100	14	40	100	230	450	900	1500
Maximum output torque T_{2M}	Nm	1, 2	3～100	3 times the rated output torque						
Rated input speed n_{1N}	rpm	1, 2	3～100	5000	5000	4000	4000	3000	3000	2000
Maximum input speed n_{2M}	rpm	1, 2	3～100	10000	10000	8000	8000	6000	6000	4000
Backlash accuracy_H (high precision)	arcmin	1	3～10	–	–	–	–	–	–	–
		2	15～100	–	–	–	–	–	–	–
Backlash accuracy_P (precision)	arcmin	1	3～10	≤4	≤4	≤4	≤4	≤4	≤4	≤4
		2	15～100	≤7	≤7	≤7	≤7	≤7	≤7	≤7
Backlash accuracy_S (standard)	arcmin	1	3～10	≤6	≤6	≤6	≤6	≤6	≤6	≤6
		2	15～100	≤9	≤9	≤9	≤9	≤9	≤9	≤9
Torsional rigidity	Nm/arcmin	1, 2	3～100	3	8	20	41	50	145	225
Allowable radial force F_{2R}	N	1, 2	3～100	780	1500	3200	6700	9400	14500	50000
Allowable axial force F_{2A}	N	1, 2	3～100	610	1050	2300	4100	8300	13500	25000
Working life	hr	1, 2	3～100	20000h						
efficiency η	%	1	3～10	≥95%						
		2	15～100	≥92%						
weight	kg	1	3～100	1	2.8	6.1	13	26.3	51	83
		2	15～100	1.5	3.2	7.7	14.2	28.5	54	95
Operating temperature	℃	1, 2	3～100	-15℃～+90℃						
lubrication		1, 2	3～100	IP65						
Ingress protection		1, 2	3～100	life Lubricated						
Mounting direction		1, 2	3～100	Any						
Noise level (n_1=3000rpm)	dB	1, 2	3～100	≤61	≤63	≤65	≤68	≤70	≤72	≤74

specification		series	Ratio	MKER-040	MKER-060	MKER-090	MKER-120	MKER-140	MKER-180	MKER-220
Inertia J_1	$kg.cm^2$	1	3～10	0.09	0.35	2.25	6.84	21.8	95.6	135.4
		2	12～100	0.09	0.09	0.35	2.25	6.84	21.8	95.6

The output speed of F_{2R} and F_{2A} is 100 rpm, acting at the center of the output shaft.

MKER Series

1-Stage :3,4,5,6,7,8,9,10

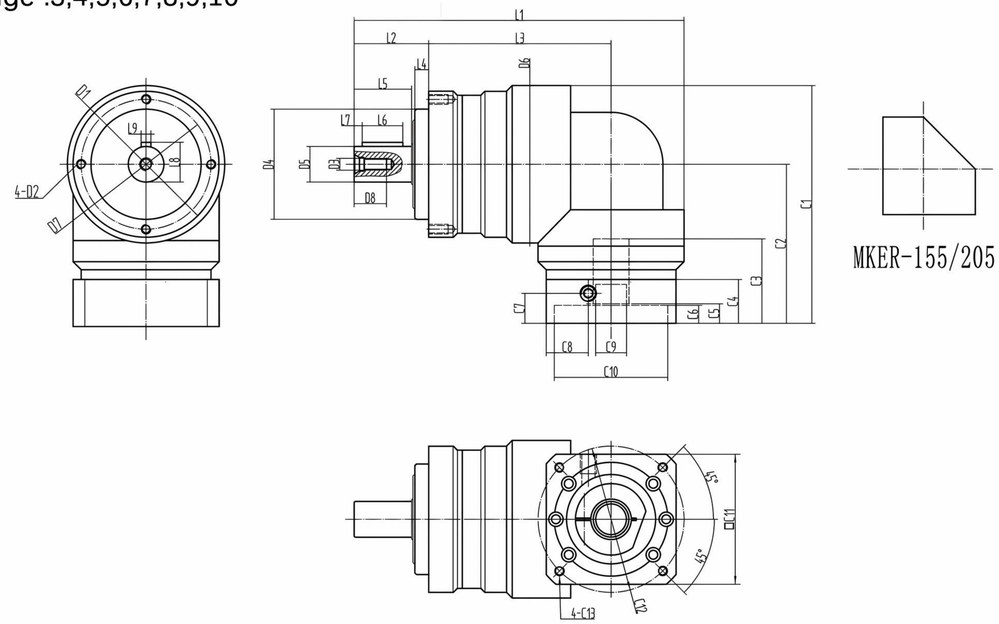

	MKER-040	MKER-060	MKER-090	MKER-120	MKER-155	MKER-205
L1*	109	159	203.5	261	346	406.5
L2	24.5	36.5	46	68.5	97	100
L3	63.5	90	112.5	131.5	174	216.5
L4	4	6.5	8.5	17.5	12	15
L5	19.5	28.5	35.5	49.5	82	82
L6	15	25	32	40	65	70
L7	2	2	2	5	5	6
L8	13.5	18	24.5	35	43	59
L9	4	5	6	10	12	16
D1	50	70	90	120	155	205
D2	M4*8	M5*10	M6*12	M8*16	M10*20	M12*25
D3	M4	M5	M8	M12	M16	M20
D4	35	52	68	90	120	160
D5	12	16	22	32	40	55
D6	46	70	97	122	150	200
D7	44	62	80	108	140	184
D8	10	12	20	28	36	42
C1*	70	115.5	146.5	187.5	236.5	287.5
C2*	47	80.5	98	126.5	161.5	187.5
C3*	27	35	52	71	83	90
C4*	17.5	23	27	37.5	47	45
C5*	7	11	11	17	16	13
C6*	3.5	10.5	11	10	8	10
C7*	11.5	16	18.5	26	26	24
C8*	14.5	19.5	26	45	61	60
C9*	8	14	19	24	35	42
C10*	30	50	70	110	114.3	114.3
C11*	42	60	80	130	176	180
C12*	46	70	90	145	200	200
C13*	M4*8	M5*10	M6*12	M8*16	M12*24	M12*24

The one with * is a reference, and the size can be adjusted.

MKER Series

2-Stage :15,20,25,30,35,40,45,50,60,70,80,90,100

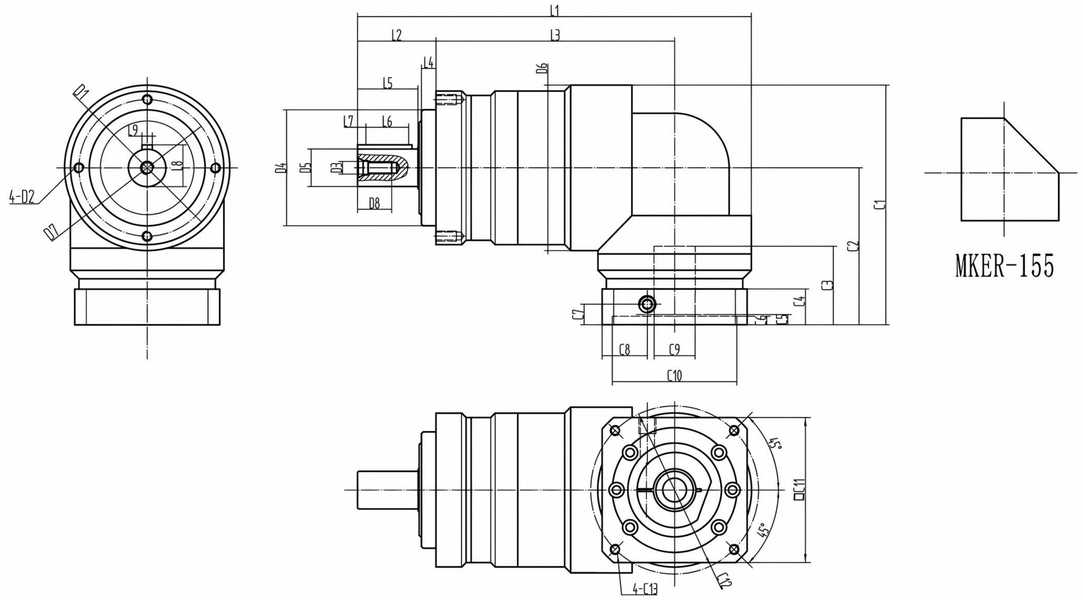

	MKER-040	MKER-060	MKER-090	MKER-120	MKER-155
L1*	126	179	231	294.5	390
L2	24.5	36.5	46	68.5	97
L3	80.5	110	140	165	218
L4	4	6.5	8.5	17.5	12
L5	19.5	28.5	35.5	49.5	82
L6	15	25	32	40	65
L7	2	2	2	5	5
L8	13.5	18	24.5	35	43
L9	4	5	6	10	12
D1	50	70	90	120	155
D2	M4*8	M5*10	M6*12	M8*16	M10*20
D3	M4	M5	M8	M12	M16
D4	35	52	68	110	120
D5	12	16	22	32	40
D6	46	70	97	122	150
D7	44	62	80	108	140
D8	10	12	20	28	36
C1*	70	115.5	146.5	187.5	236.5
C2*	47	80.5	98	126.5	161.5
C3*	27	35	52	71	83
C4*	17.5	23	27	37.5	47
C5*	7	10.5	12	17	16
C6*	3.5	10.5	11	10	8
C7*	11.5	16	18	26	26
C8*	14.5	19.5	26	45	61
C9*	8	14	19	24	35
C10*	30	50	70	110	114.3
C11*	42	60	80	130	176
C12*	46	70	90	145	200
C13*	M4*8	M5*10	M6*12	M8*16	M12*24

The one with * is a reference, and the size can be adjusted.

MKER Series

2-Stage(Smaller type) :15,20,25,30,35,40,45,50,60,70,80,90,100

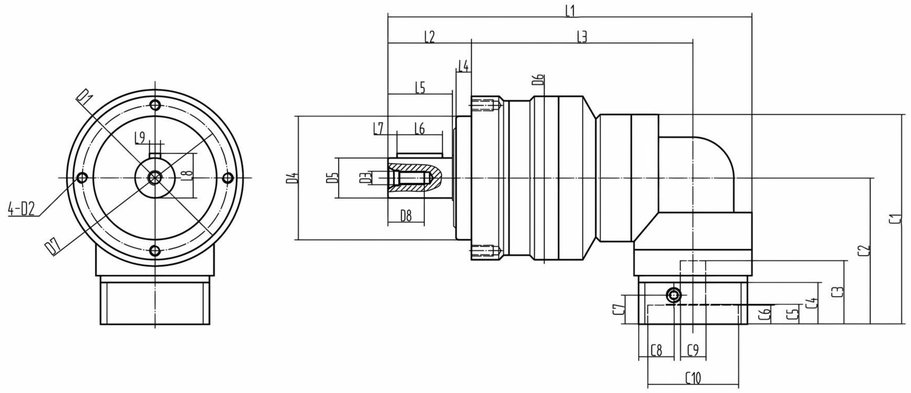

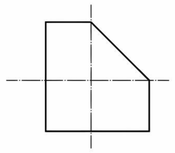

MKER-205/235

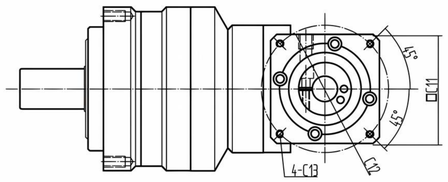

	MKER-090	MKER-120	MKER-155	MKER-205	MKER-235
L1*	200.5	256	343.5	407	488
L2	46	68.5	97	100	126
L3	122	142.5	185.5	232	272
L4	8.5	17.5	12	15	18
L5	35.5	49.5	82	82	105
L6	30	40	65	70	90
L7	2	5	5	6	7
L8	24.5	35	43	59	79.5
L9	6	10	12	16	20
D1	90	120	155	205	235
D2	M6*12	M8*16	M10*20	M12*24	M16*28
D3	M8	M12	M16	M20	M20
D4	68	90	120	160	180
D5	22	32	40	55	75
D6	90	122	150	200	225
D7	80	108	140	184	210
D8	20	28	36	42	42
C1*	125.5	159	201.5	261.5	352
C2*	80.5	98	126.5	161.5	239.5
C3*	35	52	71	83	118
C4*	23	27	37.5	47	97
C5*	11	12	17	16	67
C6*	10.5	11	10	8	10
C7*	16	18.5	27	26	76
C8*	19.5	26	45	64	60
C9*	14	19	24	35	42
C10*	50	70	110	114.3	114.3
C11*	60	80	130	176	176
C12*	70	90	145	200	200
C13*	M5*10	M6*12	M8*16	M12*25	M12*24

The one with * is a reference, and the size can be adjusted.

MOTOREDUCER

MKDR SERIES

A high-performance right-angle solution for servo applications that keeps MKDR design and characteristics.

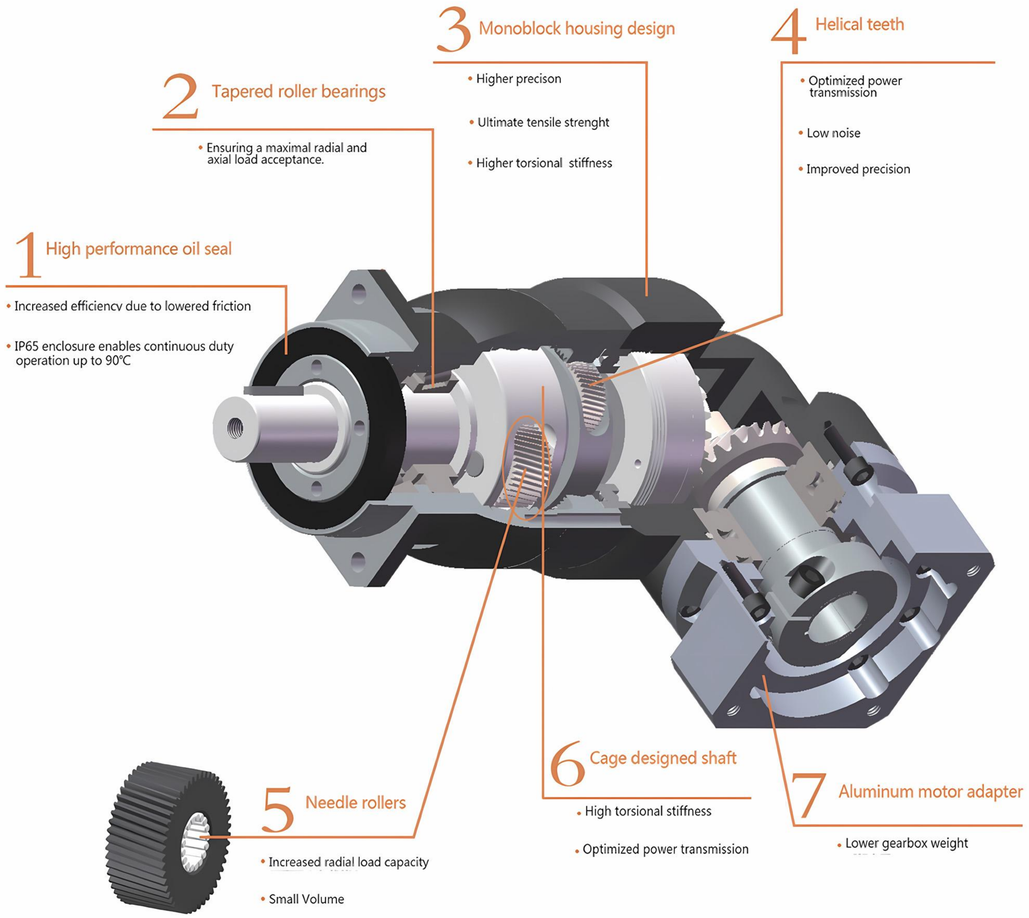

Selection data:

Nominal output torque (Nm)	40-2550
Reduction ratio	3-100
Backlash (arcmin)	4-9
Max.working temperature (℃)	90
Noise (dB)	63-74

MKDR

specification		series	Ratio	MKDR-060	MKDR-075	MKDR-100	MKDR-140	MKDR-180	MKDR-210
Rated output torque T_{2N}	Nm	1	3	55	130	240	350	1100	2000
			4	50	140	320	550	1700	2100
			5	60	160	360	650	2000	2200
			6	55	150	350	600	1900	2200
			7	55	150	360	600	1800	2200
			8	55	140	360	550	1800	2200
			9	40	100	230	450	1500	2000
			10	40	100	230	450	1500	2000
		2	15	55	130	240	460	1300	2400
			20	50	140	320	650	1800	2400
			25	60	160	330	650	2000	2550
			30	55	150	310	650	1900	2500
			35	60	150	360	550	1900	2500
			40	55	150	260	500	1600	2000
			45	40	100	230	450	1500	2000
			50	60	160	360	700	2000	2550
			60	55	150	310	600	1900	2500
			70	50	140	300	550	1800	2500
			80	55	140	360	700	1900	2550
			90	40	100	230	460	1500	2000
			100	40	100	230	460	1500	2000
Maximum output torque T_{2M}	Nm	1, 2	3～100	3 times the rated output torque					
Rated input speed n_{1N}	rpm	1, 2	3～100	5000	4000	4000	3000	3000	2000
Maximum input speed n_{2M}	rpm	1, 2	3～100	10000	8000	8000	6000	6000	4000
Backlash accuracy_H (high precision)	arcmin	1	3～10	–	–	–	–	–	–
		2	15～100	–	–	–	–	–	–
Backlash accuracy_P (precision)	arcmin	1	3～10	≤4	≤4	≤4	≤4	≤4	≤4
		2	15～100	≤7	≤7	≤7	≤7	≤7	≤7
Backlash accuracy_S (standard)	arcmin	1	3～10	≤6	≤6	≤6	≤6	≤6	≤6
		2	15～100	≤9	≤9	≤9	≤9	≤9	≤9
Torsional rigidity	Nm/arcmin	1, 2	3～100	7	14	31	53	175	400
Allowable radial force F_{2R}	N	1, 2	3～100	3000	4200	9200	14000	18500	33000
Allowable axial force F_{2A}	N	1, 2	3～100	2700	3900	6200	11400	19500	21000
Working life	hr	1, 2	3～100	20000h					
efficiency η	%	1	3～10	≥95%					
		2	15～100	≥92%					
weight	kg	1	3～100	3.1	6	8.1	35.5	60	83
		2	15～100	3.6	7.4	9.1	21.4	66	90
Operating temperature	℃	1, 2	3～100	-15℃～+90℃					
lubrication		1, 2	3～100	IP65					
Ingress protection		1, 2	3～100	life Lubricated					
Mounting direction		1, 2	3～100	Any					
Noise level (n_t=3000rqm)	dB	1, 2	3～100	≤63	≤65	≤68	≤70	≤72	≤74

specification		series	Ratio	MKDR-060	MKDR-075	MKDR-100	MKDR-140	MKDR-180	MKDR-210
Inertia J_1	$kg.cm^2$	1	3～10	0.35	2.25	6.84	21.8	95.6	135.4
		2	12～100	0.09	0.35	2.25	6.84	21.8	95.6

The output speed of F_{2R} and F_{2A} is 100 rpm, acting at the center of the output shaft.

MKDR Series

1-Stage :3,4,5,6,7,8,9,10

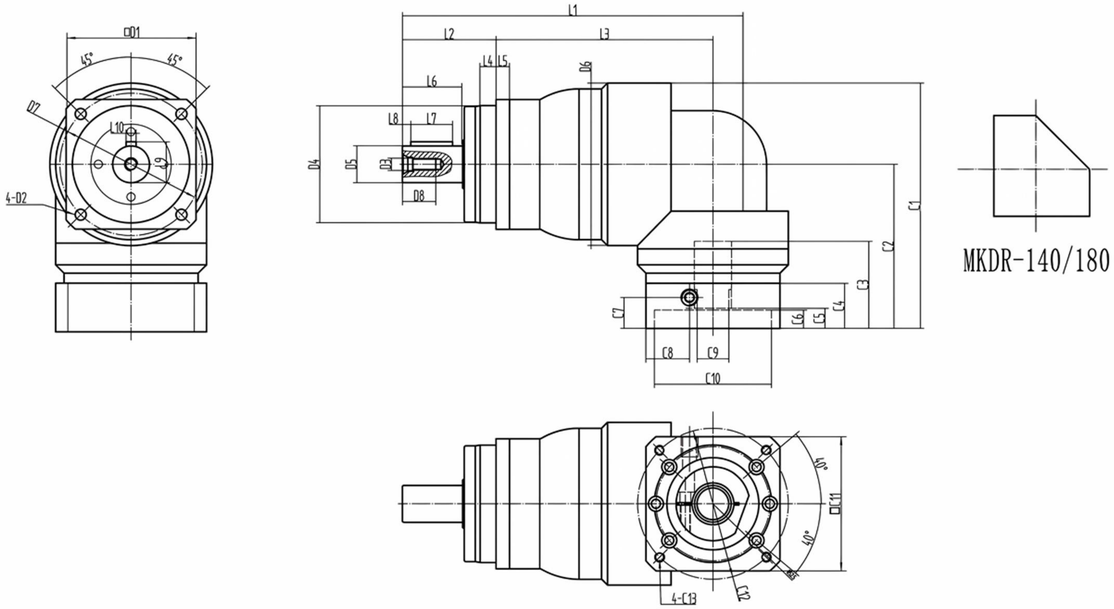

•	MKDR-060	MKDR-075	MKDR-100	MKDR-140	MKDR-180
L1*	178.5	230.5	301	383.5	475
L2	48	56	88	112	112
L3	98	129.5	152	196.5	273
L4	5	10	8	10	12
L5	6	8	10	12	15
L6	28	36	58	82	82
L7	22	25	40	70	70
L8	2	5	10	5	6
L9	18	24.5	35	43	59
L10	5	6	10	12	16
D1	60	77.5	101.5	140	182
D2	5.5	6.6	9	11	13.5
D3	M5	M8	M12	M16	M20
D4	60	70	90	130	160
D5	16	22	32	40	55
D6	70	97	122	150	205
D7	68	85	120	165	215
D8	12	20	28	36	42
C1*	115.5	146.5	187.5	236.5	340
C2*	80.5	98	126.5	161.5	237.5
C3*	35	52	71	83	140
C4*	23	27	37.5	47	97
C5*	11	12	17	16	65
C6*	10.5	11	10	8	10
C7*	16	18.5	25	26	76
C8*	19.5	26	45	61	63
C9*	14	19	24	35	42
C10*	50	70	110	114.3	114.3
C11*	60	80	130	176	180
C12*	70	90	145	200	200
C13*	M5*10	M6*12	M8*16	M12*24	M12*24

The one with * is a reference, and the size can be adjusted.

MKDR Series

2-Stage :15,20,25,30,35,40,45,50,60,70,80,90,100

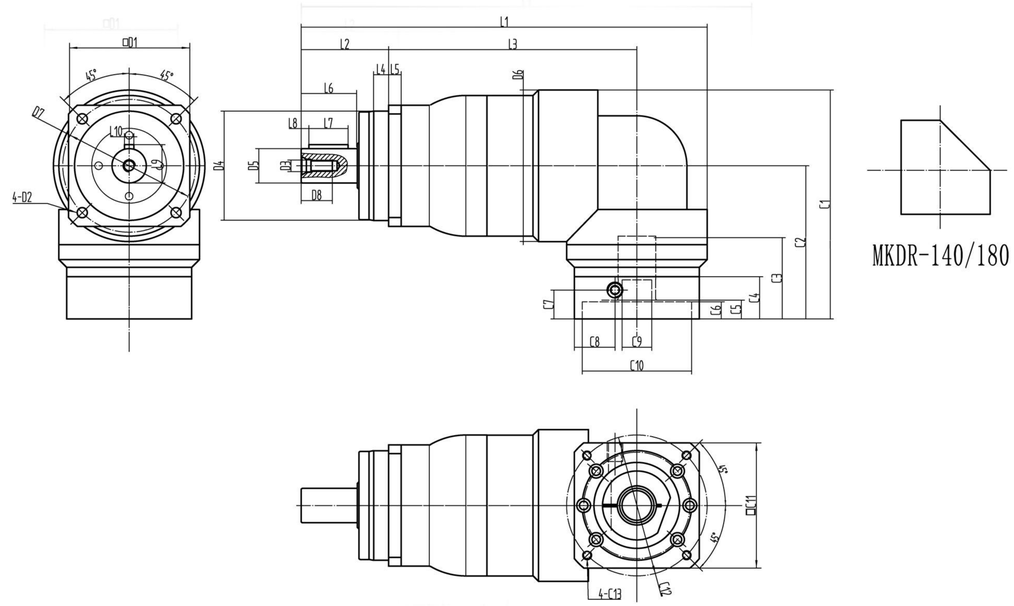

	MKDR-060	MKDR-075	MKDR-100	MKDR-140	MKDR-180
L1*	197.5	260	337.5	416.5	521.5
L2	48	56	80	112	112
L3	117	159	188.5	229.5	319.5
L4	5	10	8	10	27
L5	6	8	10	12	15
L6	28	36	58	82	82
L7	22	25	40	70	70
L8	2	5	10	5	6
L9	18	24.5	35	43	59
L10	5	6	10	12	16
D1	60	77.5	115	140	182
D2	5.5	6.6	9	11	13.5
D3	M5	M8	M12	M16	M20
D4	60	70	90	130	160
D5	16	22	32	40	55
D6	70	97	116	150	205
D7	68	85	130	165	215
D8	12	20	28	36	42
C1*	115.5	146.5	187.5	236.5	295
C2*	80.5	98	126.5	161.5	192.5
C3*	35	53	71	83	95
C4*	23	27	37.5	47	50
C5*	11	12	17	16	18
C6*	10.5	11	10	8	10
C7*	16	18.5	26	26	29
C8*	19.5	26	45	61	70
C9*	14	19	24	35	38
C10*	50	70	110	114.3	180
C11*	60	80	130	176	200
C12*	70	90	145	200	215
C13*	M5*10	M6*12	M8*16	M12*24	M12*24

The one with * is a reference, and the size can be adjusted.

MKDR Series

2-Stage(Smaller type) :15,20,25,30,35,40,45,50,60,70,80,90,100

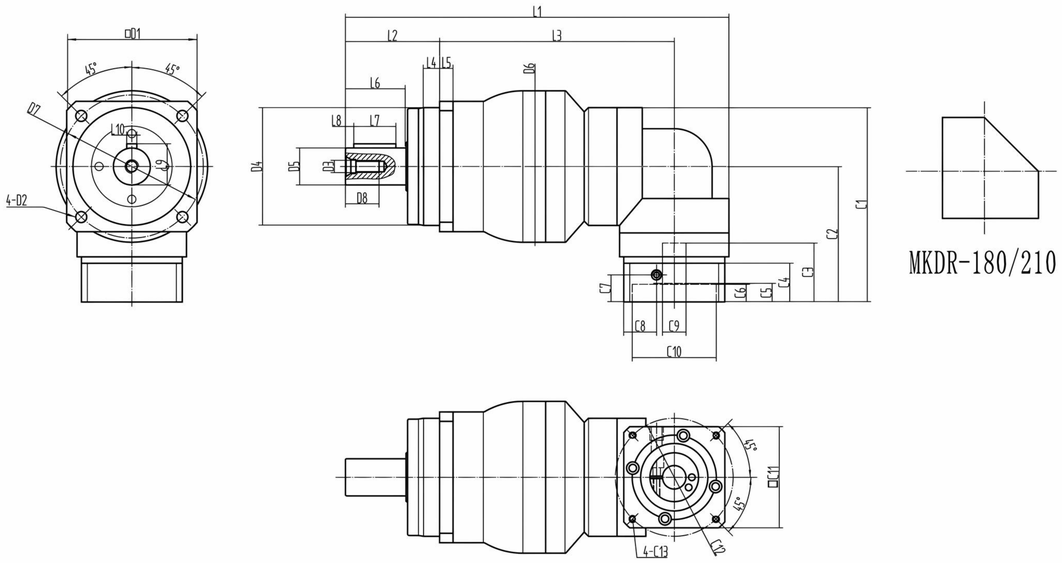

MKDR-180/210

	MKDR-075	MKDR-100	MKDR-140	MKDR-180	MKDR-210
L1*	228	296	377	468	585
L2	56	88	112	112	143
L3	139.5	163	204	281	352
L4	10	8	10	12	15
L5	8	10	12	15	17
L6	36	58	82	82	105
L7	25	40	70	70	90
L8	5	10	5	6	7
L9	24.5	35	43	59	79.5
L10	6	10	12	16	20
D1	77.5	101.5	140	182	210
D2	6.6	9	11	13.5	17
D3	M8	M12	M16	M20	M20
D4	70	90	130	160	180
D5	22	32	40	55	75
D6	90	116	150	205	241
D7	85	120	165	215	250
D8	20	28	36	42	42
C1*	125.5	156	201.5	264	360
C2*	80.5	98	126.5	161.5	239.5
C3*	35	52	71	83	116
C4*	23	27	37.5	47	97
C5*	11	12	17	16	65
C6*	10.5	11	10	8	10
C7*	16	18.5	26	26	76
C8*	19.5	26	45	64	60
C9*	14	19	24	35	42
C10*	50	70	110	114.3	114.3
C11*	60	80	130	176	176
C12*	70	90	145	200	200
C13*	M5*10	M6*12	M8*15	M12*24	M12*28

The one with * is a reference. and the size can be adjusted.

MOTOREDUCER

MKFR SERIES

A high-performance right-angle solution for servo applications that keeps MKFR design and characteristics.

Selection data:

Nominal output torque (Nm)	14-2000
Reduction ratio	3-100
Backlash (arcmin)	4-9
Max.working temperature (℃)	90
Noise (dB)	64-74

MKFR

specification		series	Ratio	MKFR-047	MKFR-064	MKFR-090	MKFR-110	MKFR-140	MKFR-200	MKFR-255
Rated output torque T2N	Nm	1	4	19	50	140	320	550	1000	1700
			5	22	60	160	360	650	1200	2000
			6	20	55	150	350	600	1100	1900
			7	20	55	150	360	600	1100	1800
			8	20	55	140	360	550	1000	1800
			9	14	40	100	230	450	900	1500
			10	14	40	100	230	450	900	1500
		2	20	19	50	140	320	650	1350	1800
			25	22	60	160	330	650	1200	2000
			30	20	55	150	310	650	1100	1900
			35	20	60	150	360	550	1400	1900
			40	20	55	150	260	500	1000	1600
			45	14	40	100	230	450	900	1500
			50	22	60	160	360	700	1400	2000
			60	20	55	150	310	600	1100	1900
			70	19	50	140	300	550	1100	1800
			80	20	55	140	360	700	1400	1900
			90	14	40	100	230	460	980	1500
			100	14	40	100	230	460	980	1500
Maximum output torque T_{2M}	Nm	1, 2	3～100	3 times the rated output torque						
Rated input speed n_{1N}	rpm	1, 2	3～100	5000	5000	4000	4000	3000	3000	2000
Maximum input speed n_{2M}	rpm	1, 2	3～100	10000	10000	8000	8000	6000	6000	4000
Backlash accuracy_H (high precision)	arcmin	1	3～10	–	–	–	–	–	–	–
		2	15～100	–	–	–	–	–	–	–
Backlash accuracy_P (precision)	arcmin	1	3～10	≤4	≤4	≤4	≤4	≤4	≤4	≤4
		2	15～100	≤7	≤7	≤7	≤7	≤7	≤7	≤7
Backlash accuracy_S (standard)	arcmin	1	3～10	≤6	≤6	≤6	≤6	≤6	≤6	≤6
		2	15～100	≤9	≤9	≤9	≤9	≤9	≤9	≤9
Torsional rigidity	Nm/arcmin	1, 2	3～100	7	13	31	82	151	450	1023
Allowable radial force F_{2R}	N	1, 2	3～100	55	110	270	440	1335	3280	5500
Allowable axial force F_{2A}	N	1, 2	3～100	990	1050	2850	4000	10590	16660	29430
Working life	hr	1, 2	3～100	20000h						
efficiency η	%	1	3～10	≥95%						
		2	15～100	≥92%						
weight	kg	1	3～100	1.1	2.1	5.9	10.5	21.9	50.9	85.4
		2	15～100	1.4	3.2	4.5	10.1	20.1	45.4	85.9
Operating temperature	℃	1, 2	3～100	-15℃～+90℃						
lubrication		1, 2	3～100	IP65						
Ingress protection		1, 2	3～100	life Lubricated						
Mounting direction		1, 2	3～100	Any						
Noise level (n_t=3000rqm)	dB	1, 2	3～100	≤61	≤63	≤65	≤68	≤70	≤72	≤74

specification		series	Ratio	MKFR-047	MKFR-064	MKFR-090	MKFR-110	MKFR-140	MKFR-200	MKFR-255
Inertia J1	$kg.cm^2$	1	4～10	0.09	0.35	2.25	6.84	21.8	95.6	135.4
		2	20～100	0.09	0.09	0.35	2.25	6.84	21.8	95.6

The output speed of F_{2R} and F_{2A} is 100 rpm, acting at the center of the output shaft.

MKFR Series

1-Stage:3,4,5,6,7,8,9,10

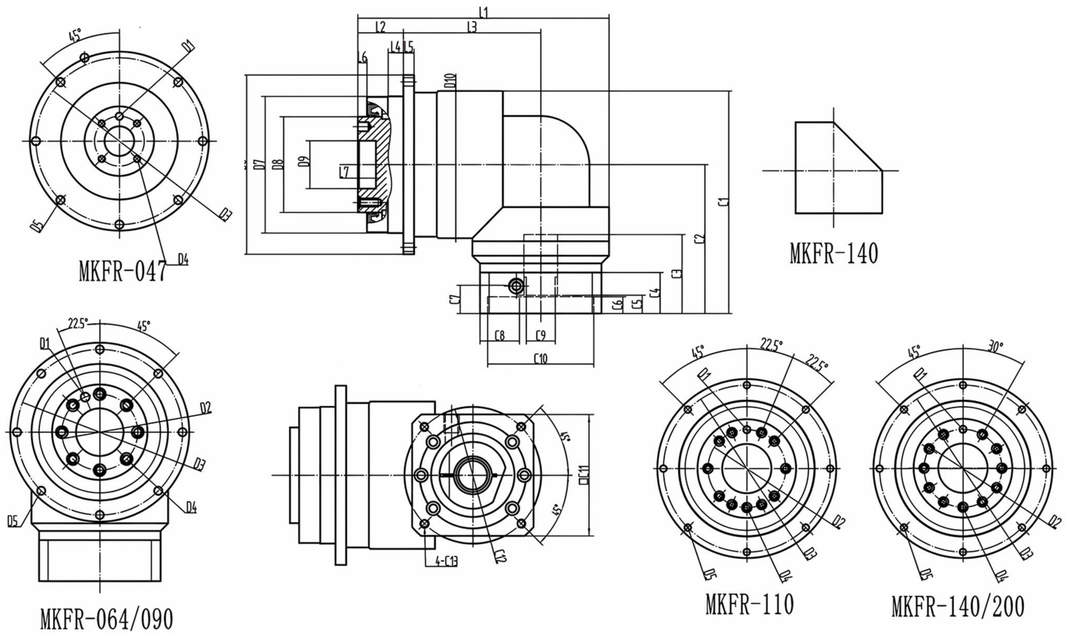

	MKFR-047	MKFR-064	MKFR-090	MKFR-110	MKFR-140	MKFR-200
L1*	88	126.5	165.5	212	255	320.5
L2	19.5	19.5	30	29	38	50
L3	47.5	74.5	90.5	122	142	270.5
L4	7	7	10	10	14.5	15
L5	4	4	7	8	10	12
L6	3	3	6	6	6	8
L7	4	8	12	13	12	16
D1	φ3*4	φ5*8	φ6*7	φ6*7	φ8*7	φ10*10
D2	20	31.5	50	63	80	125
D3	67	79	109	135	168	233
D4	4-M3*6	7-M5*8	8-M6*12	11-M6*12	11-M8*17	11-M10*20
D5	8-φ3.4	8-φ4.5	8-φ5.5	8-φ5.5	12-φ6.6	12-φ9
D6	72	86	118	145	179	247
D7	47	64	90	110	140	200
D8	28	40	63	80	100	160
D9	12	20	31.5	40	50	80
D10	60	70	97	124	150	200
C1*	83	115.5	146.5	187.5	251	287.5
C2*	47	80.5	98	126.5	161.5	187.5
C3*	27	35	52	71	83	90
C4*	17.5	23	27	37.5	47	45
C5*	7	11	11	17	16	15
C6*	3.5	10.5	11	10	8	10
C7*	11.5	16	18.5	26	26	24
C8*	14.5	19.5	26	42.5	61	60
C9*	8	14	19	24	35	42
C10*	30	50	70	110	114.3	114.3
C11*	42	60	80	130	176	180
C12*	46	70	90	145	200	200
C13*	M4*8	M5*10	M6*12	M8*16	M12*24	M12*24

The one with * is a reference, and the size can be adjusted.

MKFR Series

2-Stage :15,20,25,30,35,40,45,50,60,70,80,90,100

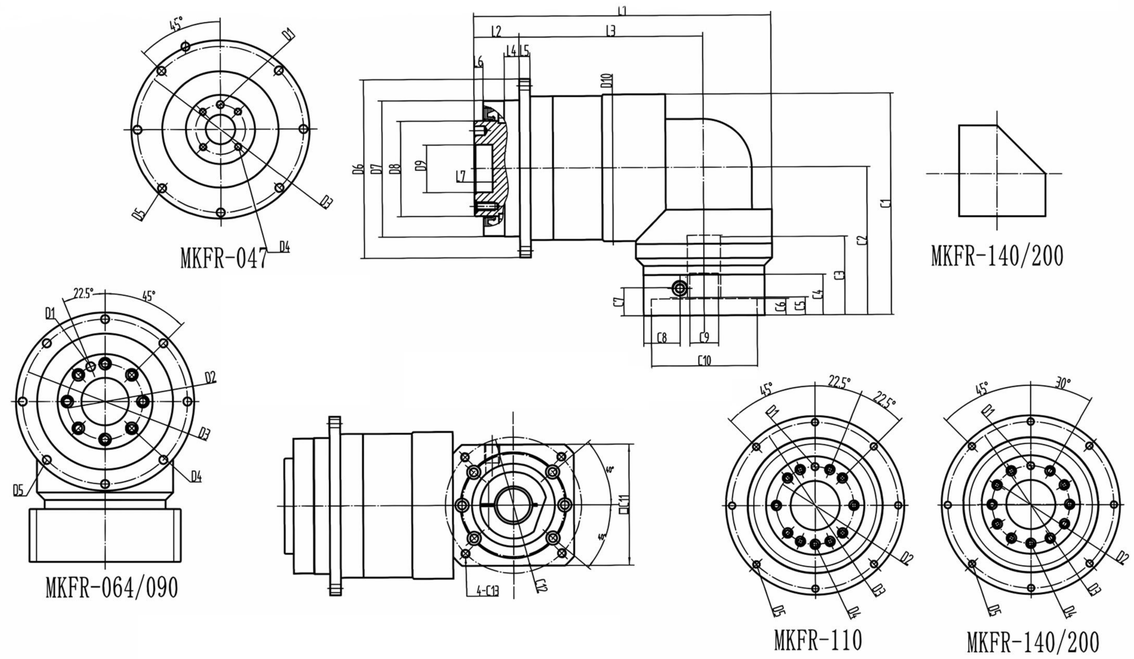

	MKFR-047	MKFR-064	MKFR-090	MKFR-110	MKFR-140	MKFR-200
L1*	105.5	150	196.5	249	309.5	372.5
L2	19.5	19.5	30	29	38	50
L3	65	98	121.5	159	196.5	229.5
L4	7	7	10	10	14.5	15
L5	4	4	7	8	10	12
L6	3	3	6	6	6	8
L7	4	8	12	13	12	16
D1	φ3*4	φ5*8	φ6*7	φ6*7	φ8*7	φ10*10
D2	20	31.5	50	63	80	125
D3	67	79	109	135	168	233
D4	4-M3*6	7-M5*8	8-M6*12	11-M6*12	11-M8*17	11-M10*20
D5	8-φ3.4	8-φ4.5	8-φ5.5	16-φ5.5	12-φ6.6	12-φ9
D6	72	86	118	145	179	247
D7	47	64	90	110	140	200
D8	28	40	63	80	100	160
D9	12	20	31.5	40	50	80
D10	60	70	97	124	150	200
C1*	83	115.5	146.5	187.5	236.5	292.5
C2*	47	80.5	98	126.5	161.5	192.5
C3*	27	35	53	71	83	95
C4*	17.5	23	27	37.5	47	50
C5*	7	11	12	17	16	20
C6*	3.5	10.5	11	10	8	10
C7*	11.5	16	18.5	26	26	29
C8*	14.5	19.5	26	42.5	61	70
C9*	8	14	19	24	35	38
C10*	30	50	70	110	114.3	180
C11*	42	60	80	130	176	200
C12*	46	70	90	145	200	215
C13*	M4*8	M5*10	M6*12	M8*16	M12*25	M12*24

The one with * is a reference, and the size can be adjusted.

MKFR Series

2-Stage(Smaller type) :15,20,25,30,35,40,45,50,60,70,80,90,100

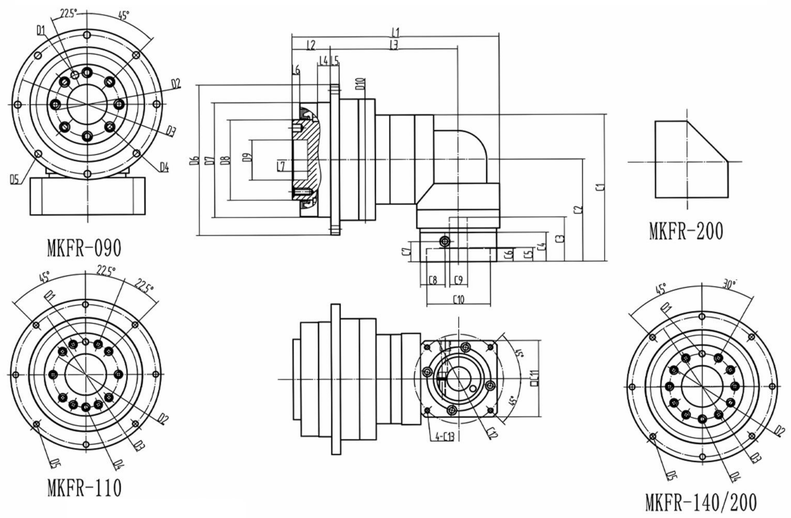

	MKFR-090	MKFR-110	MKFR-140	MKFR-200
L1*	162.5	207	264	335.5
L2	30	29	38	50
L3	100	133	165	210.5
L4	10	10	14.5	15
L5	7	8	10	12
L6	6	6	6	8
L7	12	13	12	16
D1	φ6*7	φ6*7	φ8*7	φ10*10
D2	50	63	80	125
D3	109	135	168	233
D4	8-M6*12	11-M6*12	11-M8*16	11-M10*20
D5	8-φ5.5	8-φ5.5	12-φ6.6	12-φ9
D6	118	145	179	247
D7	90	110	140	200
D8	63	80	100	160
D9	31.5	40	50	80
D10	95	124	150	200
C1*	128	160	216	261.5
C2*	80.5	98	126.5	161.5
C3*	35	52	71	83
C4*	23	27	37.5	47
C5*	11	12	17	16
C6*	10.5	11	10	8
C7*	16	18	26	26
C8*	19.5	24	45	64
C9*	14	19	24	35
C10*	50	70	110	114.3
C11*	60	80	130	176
C12*	70	90	145	200
C13*	M5*10	M6*12	M8*16	M12*25

The one with * is a reference, and the size can be adjusted.

NOTES

Since the product is constantly being upgraded, there may be discrepancies between the catalog and the actual product. The actual dimensions are subject to the confirmation drawing.